The performance figures quoted are typical and are subject to normal manufacturing and service tolerances.

The right is reserved to alter the equipment described in the manual in the light of future technical development

WARNING

Certain semiconductor devices used in this equipment contain Beryllium Oxide. If inhaled, dust from this oxide can be toxic.

No danger can arise from normal handling but no attempt should be made to tamper with these devices.

They should not be discarded with industrial or domestic waste.

WARNING

This equipment has been designed to meet relevant safety requirements.

If it is necessary to replace any safety conscious component (refer to components marked thus (⚠) in Parts List in this manual) the quoted item must be fitted. Ensure that these components are securely fastened and that all insulators or covers are fitted after servicing. Check that all warning labels are in place.

If any rewiring of the mains input supply cables is necessary the specified type must be used and alterations to the routeing or connections must not be made.

VHF FM BASE STATION
TYPE F494
UHF/LINK BASE STATION
TYPE F496

SERVICE MANUAL
ISSUE 3 JUNE 1988

Printed in England

TP101 & 103

AMENDMENT LIST

Changes made to the equipment described in this manual are published as amendments which are dated and consecutively numbered.

Reprints of the manual will incorporate all the amendments to date and an entry to this effect will be recorded on the amendment list below. Each page affected by amendment action will bear the amendment number as a suffix to the manual reference number e.g. TP123/4 indicates that the page has been corrected by amendment number 4.

Should it be necessary to raise the issue of a manual the amendment numbering will recommence with No. 1.

Amend't No.	Date	Initials	Remarks
1	April '87		Incorporated on reprint
2	June '88		
3	Feb '89		
4	June '91		

PART 1
LINK/BASE STATION

CONTENTS

ILLUSTRATIONS

See overleaf

LIST OF ILLUSTRATIONS

SECTION 1
GENERAL INFORMATION

SUMMARY OF DATA

General

Operation	Single or two frequency simplex, duplex or repeater (talkthrough) depending on control option.
Modulation	Phase modulation
Frequency	F494 A0 Band 148–174 MHz B0 Band 132–156 MHz E0 Band 68– 88 MHz M1 Band 105–108 MHz M2 Band 138–141 MHz (M1 and M2 Bands available as single channel, 12,5 kHz channel spacing only) F496 T1 Band 405–440 MHz U0 Band 440–470 MHz
Channel Spacing	12,5 kHz (S) 20 kHz (R) 25 kHz (V)
No. of Channels	Single or up to 6
Operating Temperature Range	From −30°C to +60°C ambient
Frequency Stability	Better than: ±5ppm between −10°C and +60°C ±5ppm between −30°C and +60°C ±2ppm between −10°C and +60°C:– F496; using compensated crystal oven (Single channel version only)
Power Supply Requirements	(i) 115,220,240V AC ±10% at 40–60 Hz with +24V DC standby facility, negative ground. (ii) 115,220,240V AC ±10% at 40–60 Hz with +12V DC standby facility, negative ground. (iii) 19–28V DC, negative ground
Power Consumption	Supply AC / Receive 20VA / Transmit 160VA (at 25W output)
Dimensions	Width 465mm (18,3 in) / Height 410mm (16,1 in) / Depth 95mm (3,7 in)
Weight	11 kg (24 lb)
Indicators	POWER ON – Green

Transmitter

Power Output	F494: Continuously adjustable from 6W to 25W F496: Continuously adjustable from 1–6W or 10–25W (with optional 25W PA)
Output Impedance	50 ohms (nominal)
Spurious Outputs	Less than 0,25μW
Modulation Response	+1 db to −3 db from 300 Hz to 3 kHz, relative to 1 kHz and 6 db/octave pre-emphasis characteristic

Modulation Deviation	Less than: ±2,5 kHz peak (12,5 kHz channel spacing) ±4 kHz peak (20 kHz channel spacing) ±5 kHz peak (25 kHz channel spacing)
Modulation Distortion	Less than 3% (at 60% system deviation with 1 kHz)
Modulation Sensitivity	600 ohm input: Preset adjustable from −30 dbm to 0 dbm (for 60% system deviation with 1 kHz) Engineers Handset: Preset adjustable from 2mV to 25mV.
Hum and Noise	Better than −55 db, relative to 3 kHz deviation
Duty Cycle	F494: Intermittent up to +40°C F496: 6W Version: Continuous up to +60°C 25W Version: Intermittent up to +35°C
Rise Time	Less than 30mS (Dependant on control module fitted).
Receiver	
Sensitivity	12db SINAD for less than 0,35μV (PD) signal input
Input Impedance	50 ohms (nominal)
Selectivity	Better than 100 db
Spurious Response Attenuation	F494: Better than 85 db F496: Better than 75 db
Intermodulation Attenuation	F494: Better than 80 db F496: Better than 75 db
Audio Output	600 Ohm output: Preset adjustable from −15 dbm to 0 dbm with less than 5% distortion (for 60% system deviation at 1 kHz). Engineers Handset: Adjustable, up to 1mW into 300 ohms
Audio Response	+1 db to −3 db from 300 Hz to 3 kHz (2,6 kHz at 12,5 kHz channel spacing), relative to 1 kHz and 6 db/octave de-emphasis characteristic
Squelch Sensitivity	Preset adjustable between 0,3μV and 0,6μV (PD)
Switching Bandwidth	±0,2% of the mean frequency between the lowest and highest switched channels.

Note: Performance figures quoted are for equipments with 25 kHz channel spacing.

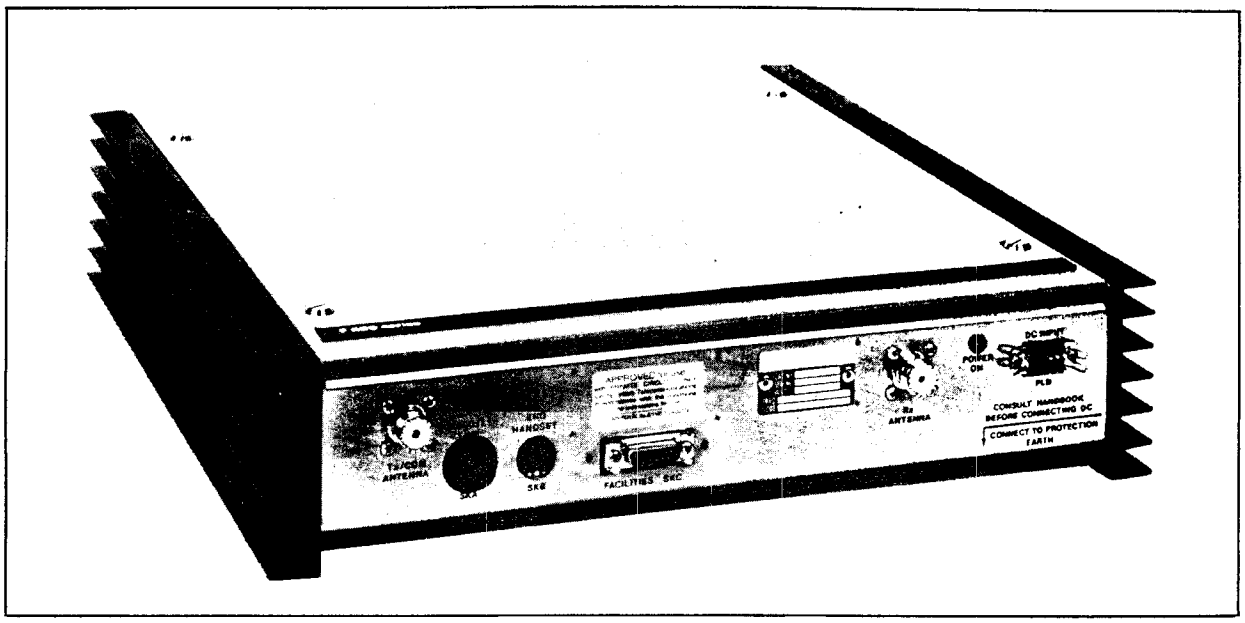

INTRODUCTION

The F490 FM series comprises remotely controlled VHF (F494) and UHF (F496) base stations which may be fitted for single channel or multi-channel (up to 6 channels) operation. The F494 transmitter delivers a nominal power output of 25 watts continuously adjustable down to 6 watts whilst the F496 transmitter delivers a nominal power output of 6 watts but, with the addition of an optional internal power amplifier, this output may be increased to 25 watts.

The equipment may be operated from standard AC supplies and has provision for a standby DC supply that is automatically selected in the event of an AC power failure; the standby DC supply may be +12V or +24V. A version of the equipment which operates solely from a +24V DC supply is also available.

The unit is of rugged modular construction and has been designed to be mounted vertically on a wall using the cradle provided.

Maintenance and servicing are made simple by the liberal provision of test points. For test purposes provision is made for an engineers handset to be connected to the equipment.

A number of control module options are available with these base stations enabling them to be used with a variety of Controllers.

OPTIONS

Equipment Label

The sub-assemblies fitted to an equipment will vary according to the role in which it is used. The complement of sub-assemblies for any particular equipment is indicated by a code number shown on the equipment label (together with catalogue and serial numbers) attached to the unit.

A typical equipment number is shown below:

F496	01	1	2	2	0	1	V	T1	T1	U	22	30
Catalogue Number	Market Code	RF Power Output	Power Supply	Antenna	No of Xtalled Chans	Labels	Channel Spacing	Tx Band	Rx Band	No of Chans	Control	Ancillaries

Frequency Label

The transceiver frequencies, when known, are shown on the frequency label attached to the unit.

Should the equipment be supplied less crystals, reference should be made to CRYSTAL INFORMATION in Section 2.

Market Code

F494:	01 Standard Production	02 France	03 Germany	06 Denmark
	07 Sweden	11 Switzerland	13 Holland	14 Italy
	25 Austria			
F496:	01 Standard Production	02 France	03 Germany	06 Denmark
	07 Sweden	14 Italy		

Power Output

1 25 Watts (Standard setting for all high power equipments, less crystals)
2 15 Watts
3 10 Watts
4 6 Watts (Standard setting for all low power equipments, less crystals).
5 1 Watt (F496 only)

Power Supply

1 AC supply with 24V DC Standby, negative ground
2 AC supply with 12V DC Standby, negative ground
3 24V DC, negative ground

Antenna

1 Two Antennae or Duplexer Working (Duplexer ordered separately)
2 Single Antenna Working with Antenna Changeover Relay (Control options 11,21,31 & 41 only).

No. of Xtalled Channels

0 Less Crystals
1-6 No. of Crystalled Channels

Labels

A Less Label
2 With Philips Label } Manufacturing Only

Channel Spacing

S 12,5 kHz
R 20 kHz
V 25 kHz

Tx Band

F494:	A0	148–174 MHz	
	B0	132–156 MHz	
	E0	68– 88 MHz	
	M1	105–108 MHz	(Single channel, 12,5 kHz channel spacing only)
	M2	138–141 MHz	
F496:	T1	405–440 MHz	
	U0	440–470 MHz	

Rx Band

F494:	A0	148–174 MHz	
	B0	132–156 MHz	
	E0	68– 88 MHz	
	M1	105–108 MHz	(Single channel, 12,5 kHz channel spacing only)
	M2	138–141 MHz	
F496:	T1	405–440 MHz	
	U0	440–470 MHz	

No. of Channels

F494:	1	Single Channel	
	6	Fitted for up to Six Channels (Systems Only)	
	U	Single Channel	Using Temperature Compensated Crystals
	V	Fitted for up to Six Channels (System Only)	
F496:	U	Single Channel (Crystal oven fitted on 12,5 kHz channel spacing)	
	V	Fitted for up to Six Channels (Systems Only)	

Control

Special Applications

11	Systems Base Station
12	Link Station (F496 only)
13	Systems Base Station with T/T, also suitable for Danish Extension Control
14	Link Station with fast Tx risetime and reduced squelch opening time (6W,2 antenna only). (F496 only)

Remote Control Base Stations Using PC1

21	Tx/Rx–Type 1 Line Switching
22	Tx/Rx + T/T – Type 2B Line Switching
23	Tx/Rx + T/T + SQD – Type 3A Line Switching
27	Tx/Rx + CTCSS Controlled T/T + SQD – Type 3A Line Switching

Remote Control Base Stations Using M80 Series Controller

31	Tx/Rx – Simplex 2 wire
32	Tx/Rx–Duplex 4 wire (Systems Only)
33	Tx/Rx +T/T+SQD–Simplex 2 wire
34	Tx/Rx+T/T+SQD–Duplex 4 wire (Systems Only)
37	Tx/Rx+CTCSS Controlled T/T+SQD–Simplex 2 wire

Local Control Base Stations Using MC490

41	Tx/Rx
42	Tx/Rx + T/T + SQD
47	Tx/Rx + CTCSS Controlled T/T + SQD

Repeater Stations

51	Free Running Repeater Station
57	CTCSS Controlled Repeater Station

Note: TED3 to be ordered separately on all CTCSS controlled systems

Ancillaries

00	Less Options
01	Provision for TE1 (CTCSS Encoder Only Module) to be fitted (See Pye Publication Ref No TP216 for full details)
04	Provision for TED3 (CTCSS Decoder Only Module) to be fitted (See Pye Publication Ref No TP221 for full details)
05	Provision for TE1 & TED3 (CTCSS Encoder and Decoder Modules) to be fitted
10	Mating Connectors
11	10 + 01
14	10 + 04
15	10 + 05
20	Wall Mounting Cradle and Fittings
21	20 + 01
24	20 + 04
25	20 + 05
30	20 + 10
31	30 + 01
34	30 + 04
35	30 + 05
40	Eurorack Mounting Kit (Non Runner Version)
41	40 + 01
44	40 + 04
45	40 + 05
50	40 + 10
51	50 + 01
54	50 + 04
55	50 + 05
60	Eurorack Mounting Kit (Runner Version)
61	60 + 01
64	60 + 04
65	60 + 05
70	60 + 10
71	70 + 01
74	70 + 04
75	70 + 05

Note: TE1 and TED3 to be ordered separately

MODULE IDENTIFICATION

For ease of identification each module is allotted a prefix number which is shown on the overall circuit diagram enabling cross references to the text and parts list to be made. It should be noted these prefixes apply only to the F490 base stations.

[0] Base station chassis
[1] Regulator board
[2] Receiver board
[3] Transmitter board
[4] 25W PA board (F496 only)
[5] Control board
[6] Facility Module

SECTION 2

INSTALLATION AND OPERATION

UNPACKING

Unpack the container and check that there is no damage or shortage with regard to the items supplied.

Note: The Company or their authorised agents, must be advised by letter, of any apparent damage or shortage within 10 days of receipt.

SERVICEABILITY CHECK

Prior to installation it is advisable to bench check the equipment for serviceability in the following manner:

Note: (i) Crystals are normally fitted before shipment and the Frequency Label, on the inside of the transmitter-receiver, suitably inscribed with details of the channel frequencies. For equipment supplied less crystals reference should be made to CRYSTAL INFORMATION in this section.

(ii) On multichannel equipment the channel switches are housed on the receiver and transmitter boards; it is, therefore, necessary to gain access to these boards in order to change channel.

Test equipment

The following is a list of suitable test equipment required for the serviceability check:

Description	Type
DC Power Supply, 10-30V, 10A	Farnell H60/25
Signal Generator	Hewlett-Packard 8640B
Oscilloscope	Gould Advance 0S1000A
RF Power Meter 50Ω	Bird Termaline 6154
Frequency counter	Racal 9915
Marker Oscillator 10,7 MHz	PT507
Multimeter	Avometer 8
RF Fuse	Marconi TM9884
RF Signal Sampler	Bird 4275
Engineers Handset	FH00653

WARNING

Before removing the cover or any of the PWBs ensure that the transceiver is disconnected from the power supply.

1. Preliminaries

Remove the cover from the unit as described in EQUIPMENT ACCESS, Section 4.

2. Control Module

Check that the correct type of control module is fitted; referring to the 'Link Details' given in the appropriate module sub-section of Part 2 of the service manual check that the links on the board are correctly set for the control method to be used.

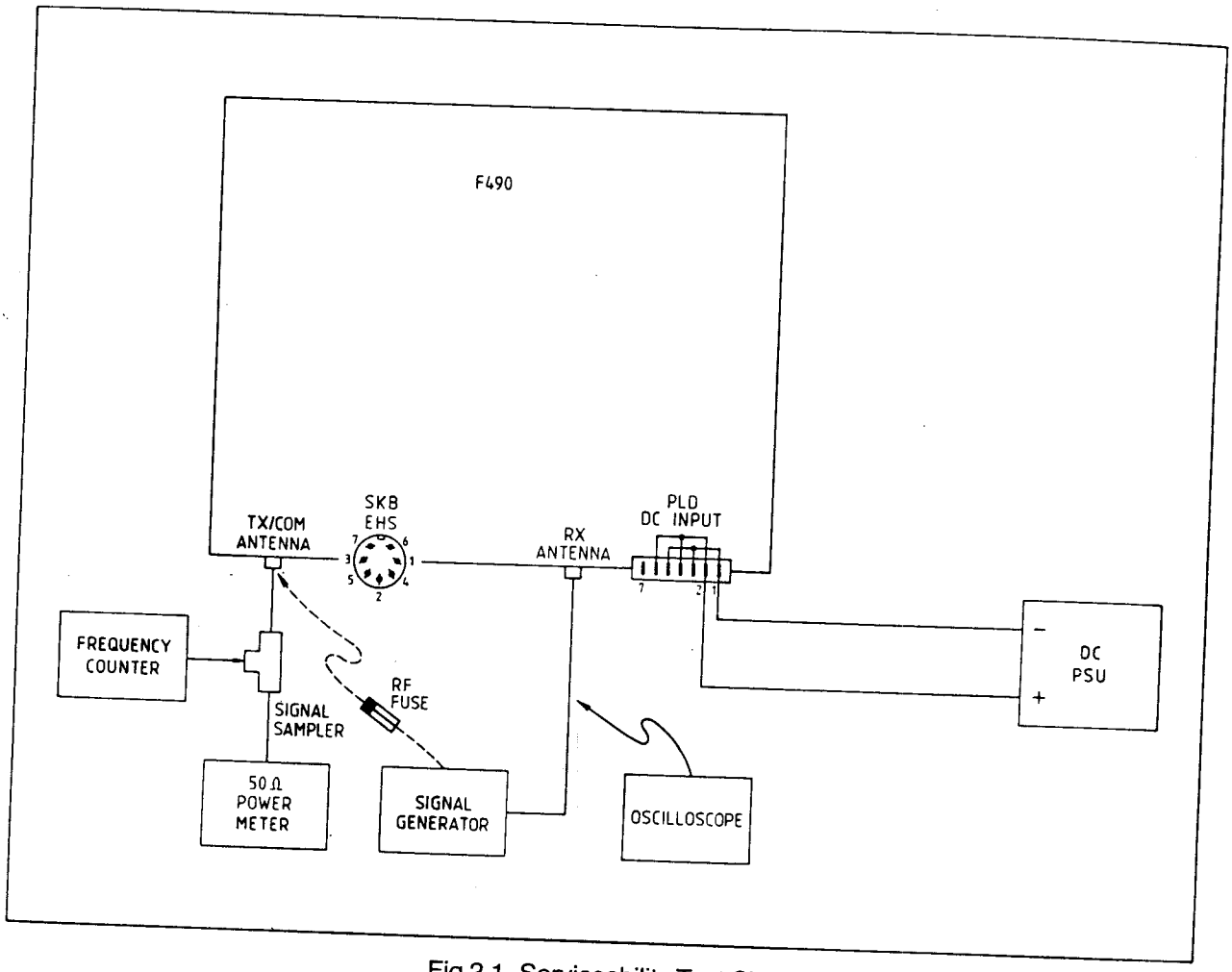

Fig 2.1 Serviceability Test Circuit

3. AC Supply

(a) Check that the correct fuse values are fitted in the equipment

(i)	[0]FS1	Chassis (AC Input)	2A (Time Lag) for 240V supply 3,15A (Time Lag) for 115V supply
(ii)	[1]FS1	Regulator Board	10A
(iii)	[1]FS2	Regulator Board	10A

(b) Remove the cover over the AC supply transformer [0] T1 as described under EQUIPMENT ACCESS, Section 4. Check that the AC supply transformer [0] T1 primary windings are correctly wired for the supply voltage to be used. Refit the transformer cover.

4. DC Supply

(a) The maximum permissable voltage applied to the DC Input connector PLD is:–
15,6V for 12V DC Standby Equipments
28V for 24V DC Equipments

Note: Where a +12V DC standby facility is used an input voltage of less than +13,8V DC may result in reduced RF Power Output.

(b) When a battery supply is used (either for standby or as sole source) it is recommended that a 10A fuse (not supplied) be fitted in the +ve supply lead.

(c)

WARNING

Most types of battery contain corrosive liquids and emit explosive gases. Therefore, when installing or charging such types of battery it is essential to follow the battery manufacturers safety recommendations

Receiver

1. Connect the signal generator to the appropriate antenna socket (Fig 2.1). Set generator output to channel frequency ±10Hz unmodulated at a level of 1mV.
2. Hold marker oscillator near the IF section.
3. Adjust L9–14 (as appropriate) for 'zero beat' on each channel in turn.

COMPLETION

Refit the cover to the unit.

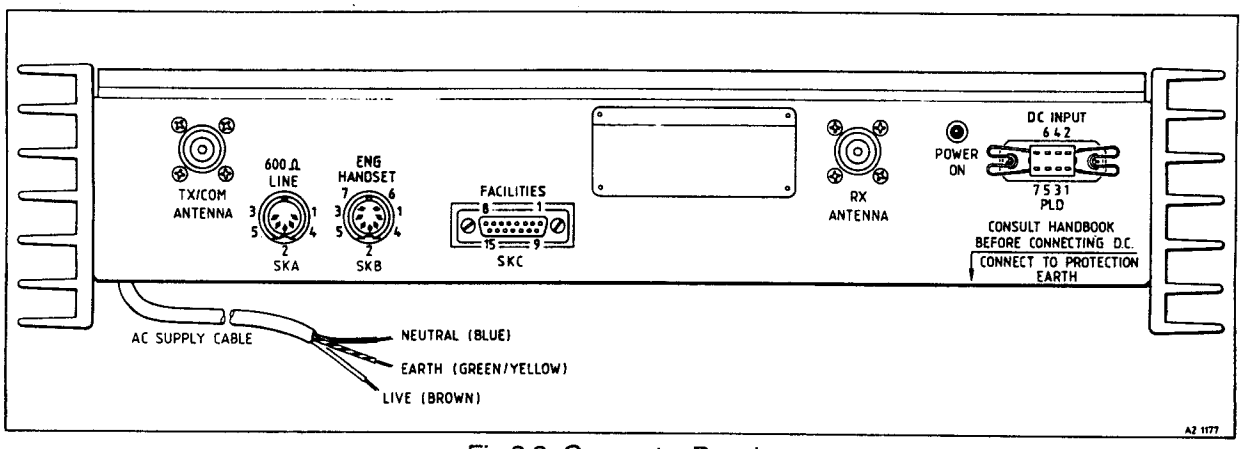

Fig 2.3 Connector Panel

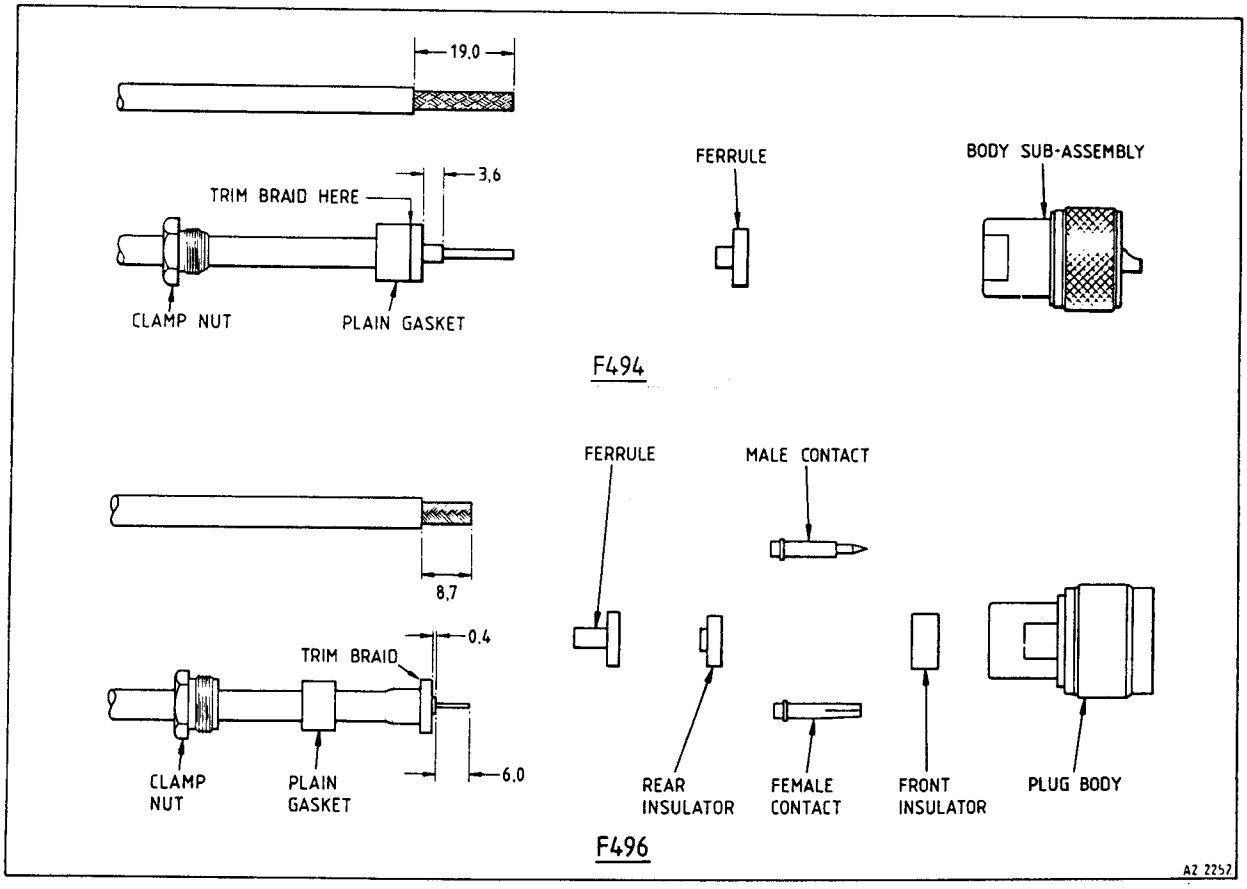

Fig 2.4 Antenna Feeder Plug Assembly

CRYSTAL INFORMATION

Receiver 2nd Oscillator

Standard 11,155 MHz (F494), 20,945 MHz (F496). Alternative 10,245 MHz (F494), 21,855 MHz (F496). The alternative is used only when the carrier frequency is within 100 kHz of a multiple of the standard frequency.

Note: Specifications apply to the UK only, information for other areas being provided on request. Failure to fit the crystals specified for an area may infringe type approval regulations and/or temperature environmental requirements.

F494

Transmitter

Band	Frequency Range fc(MHz)	Crystal Frequency fx(MHz)	Crystal Range	Crystal Type
A0	148–174	$fx=\frac{fc}{16}$	8,125–10,875	T92DQ
B0	132–156	$fx=\frac{fc}{16}$	8,25–9,75	T92DQ
E0	68–88	$fx=\frac{fc}{16}$	4,25–5,5	T92DQ
M1	105–108	$fx=\frac{fc}{16}$	6,5625–6,75	T92DQ
M2	138–141	$fx=\frac{fc}{16}$	8,625–8,8125	T92DQ

Receiver

Band	Frequency Range fc(MHz)	Crystal Frequency fx(MHz)	Crystal Range	Crystal Type
A0	148–174	$fx=\frac{fc-10,7}{3}$	45,76–54,44	T84W
B0	132–156	$fx=\frac{fc+10,7}{3}$	47,56–55,56	T84W
E0	68–88	$fx=\frac{fc+10,7}{2}$	39,35–49,35	T84W
M1	105–108	$fx=\frac{fc-10,7}{2}$	47,15–48,65	T84W
M2	138–141	$fx=\frac{fc+10,7}{3}$	49,56–50,56	T84W

F496

Transmitter

Band	Frequency Range fc (MHz)	Crystal Frequency fx (MHz)	Crystal Range	Crystal Type	
				(a)	(b)
T1	405–440	$fx = \frac{fc}{32}$	12,66–13,75	T92DQ	P504DQA
U0	440–470	$fx = \frac{fc}{32}$	13,75–14,69	T92DQ	P504DQA

Receiver

Band	Frequency Range fc (MHz)	Crystal Frequency fx (MHz)	Crystal Range	Crystal Type	
				(a)	(b)
T1	405–440	$fx = \frac{fc + 21,4}{8}$	53,30–57,66	T84W	P99DQ
U0	440–470	$fx = \frac{fc - 21,4}{8}$	52,33–56,08	T84W	P99DQ

Note: Crystal Type (b) For use with Crystal Oven (12,5 kHz channel spacing).
The suffix A denotes 'Aged' crystal

Receiver [2] (F496)

RF signals at the antenna are routed, via the Rx antenna filter L57,C196–199, to an RF filter, L1,2. The output of the common collector amplifier TR1 is applied to a three stage RF filter L3–5 which provides further RF selectivity. The filter output is applied to the 1st mixer TR2.

The 1st receiver oscillator, a modified Colpitts type, employs a series resonant third overtone crystal (XL1–6) whose exact frequency is set by trimmers L9–14. Crystal stability at low temperatures is achieved by the use of self-regulating resistors R41–46 known as pozistors, these are positioned adjacent to the crystals and kept in thermal contact with them by means of an insulating sleeve.

The receiver oscillator load L15, C41 is tuned to the 2nd harmonic of the crystal which is doubled by TR12. L17, C48 select the second harmonic, this is doubled in TR13. The output is filtered by L18,L19 and applied to TR14; the amplified signal is filtered by L20, 21 to provide the injection frequency to the 1st mixer a dual gate MOSFET. The filter stages L18,19 and L20,21 provide high selectivity of the injection signal against unwanted harmonics of the crystal.

The 1st mixer TR2 produces an IF of 21,4 MHz, selected by L7,C7. The 8-pole crystal filter FL1 provides the majority of adjacent channel rejection and determines the receiver selectivity.

The emitter follower TR3 matches the filter output to the 1st amplifier TR4 whose output is fed to IC1, pin 16.

The crystal controlled 2nd oscillator XL13, TR15 produces an injection frequency which is applied to the 2nd mixer in IC1, on pin 1. The 2nd IF of 455 kHz is filtered in FL2 to reduce noise bandwidth and improve adjacent channel rejection. The 2nd IF is amplified in IC1 and then fed to the discriminator (also in IC1) whose tuned circuit is formed by L8, C20. The discriminator output on pin 9 is routed to the audio and squelch circuits.

The audio signal from the discriminator is de-emphasised by R23, C22, C23 and applied to the variable gain (as determined by RV1) stage TR5,6. The amplified output is fed to TR7 which, together with its associated components forms an active high-pass filter to reduce low frequency noise. The output from TR7 is routed to the control board on SKF (via F1), or via the tone option (if fitted), on G1

Note: In the following paragraphs the circuit references are for F496 equipments. Circuit references for F494 equipments, where different, are given in brackets.

Squelch

Under no signal conditions the discriminator output consists substantially of noise which is applied to the active high pass filter TR16 (TR13) where frequencies above 15 kHz are extracted, the output is applied to amplifier TR17 (TR14), the gain of which is set by the preset squelch control RV3 (RV4). D6, (D5) causes the positive-going half cycles of the signal to be amplified more than those which are negative going thus, IC3 behaves as a rectifier with smoothing provided through R95,C75,87 (R80, C79). The schmitt trigger TR18,19 (TR15,16) provides a switched output which is fed, via SKF, to the squelch gate on the control board.

With a signal present the noise level falls causing IC3 output to fall and the schmitt trigger to change state.

10V Regulator

This circuit comprises a series limiter TR43 (TR39) controlled by TR41 (TR37) and TR42 (TR38) with short circuit protection provided by D14.

The regulated output voltage is sampled by TR41 (TR37) and compared with the 8,2V reference from zener diode D13. Any change in the output voltage develops an error signal between TR42 (TR38) base and emitter which is applied to the base of TR43 (TR39) causing the volt-drop to vary in such a manner as to restore the output voltage at the collector of power transistor TR43 (TR39) to normal (9,8–10,2V depending on the 'select-on-test' value of R186 (R176)).

R179 ensures that the regulator starts under all normal conditions.

In the event of a short-circuit being present, D14 together with TR42 (TR38) switch off TR43 (TR39) thus protecting the regulator, which resumes normal operation when the short circuit is removed.

Transmitter [3]

Tx line audio from the control board, at SKE, is applied to the pre-emphasis amplifier; audio from the engineers handset is fed, via the sensitivity control RV4 (RV5), to the microphone pre-amplifier TR20 (TR17). The two-stage pre-emphasis amplifier TR21,22 (TR18,19) has a 6db/octave slope; R111 (R95) is selected on test to give optimum symmetry from the diode limiter D9,10; de-emphasis is achieved by R122, C94 (R105,C96). A two-stage active low-pass filter TR23,24 (TR20,21) removes unwanted high frequency components while the emitter follower TR25 (TR22) matches the signal, via the peak deviation control RV5 (RV6), to the phase modulator TR28 (TR25).

The Tx oscillator TR26 (TR23) is crystal controlled (by XL7–12) and operates in the fundamental series resonant mode, the exact frequency of oscillation being set by trimmers L22–27 (L18–23). Crystal stability at low temperatures is achieved by pozistors R131–136 (R115–120).

The output from the oscillator is buffered by TR27 (TR24) and applied to the phase modulator. The signal at TR28 (TR25) collector is the phasor sum of the direct component, fed forward via C119, and a component amplified by TR28 (TR25), the latter being amplitude modulated by the AF signal. The resultant phase modulated output is buffered by TR29 (TR26) which also 'clips out' the amplitude modulation. TR30, TR31 (TR27,28) are FET frequency doublers, each contributing some gain. A further series of doublers using bipolar transistors TR32,33,34 (TR29,30) brings the RF up to final frequency. Total multiplication is thirty-two (F496), sixteen (F494).

On F494 equipments TR31,32,35,36 form an amplifier chain capable of delivering up to 25 Watts into a 50Ω load, via the Tx antenna filter L43–46, C187–195.

On F496 equipments TR36,38,40 form the power amplifier chain giving a nominal 6W output, an optional 25W PA module being available.

Automatic Level Control

The purpose of this circuit is to maintain the PA output level despite fluctuations in drive level and supply voltage by providing a constant current to TR40 (TR35,36).

R184 (R168) samples the current drawn by the PA to produce a voltage drop which is added to a portion of the voltage across D11,12, determined by the setting of RV6 (RV7) (POWER SET). The resultant voltage sum is applied to TR39 (TR34) base, controlling the degree to which TR39 (TR34) conducts and consequently the amount of current shunted from TR37 (TR33) base. Therefore, if the PA current tends to rise, TR37 (TR33) reduces the supply voltage to TR36 (TR32) and TR38 (F496 only) thus reducing the PA drive.

On F496 equipments the power output can be adjusted, by means of RV6, to any level up to 6W (25W PA module not fitted) or 25W (25W PA module fitted).

Crystal Oven Assembly (F496 only)

Crystal oven temperature stabilisation is provided by thermistor TH1 and transistor TR1. When a temperature of approximately 80°C is reached the increased resistance of TH1 causes a fall in the voltage drop across R1 hence reducing the conduction of TR1 to a steady value sufficient to maintain the oven at this temperature. TR2 provides current limiting to prevent TR1 being over-driven at switch on.

SECTION 4
SERVICING

GENERAL

Metal Oxide Silicon Devices

The field effect transistors and C-MOS integrated circuits used in this equipment are metal oxide silicon devices. Because they have an extremely high input impedance, they are susceptible to damage when subjected to high transient voltages or static electrical charges. To eliminate the possibility of damage the following precautions must be taken:

(i) Device leads must always be in contact with a conductive material to avoid the build-up of static charges.

(ii) Soldering iron tips, tools and metal parts of test equipment used during servicing must be grounded.

(iii) To avoid transient voltage spikes, devices must not be inserted nor removed with power connected.

(iv) Signals must not be applied to integrated circuits in the absence of power supplies to the devices.

Transmitter Loading

Although the protection circuits ensure that the transceiver operates safely under a wide range of loading conditions, it is not advisable to operate the transmitter without a load connected to the antenna socket. During transmitter servicing, the RF power meter and load provide a suitable termination.

PWB Handling

Take care not to distort the printed wire boards, especially during fitment or removal. Distortion of PWBs can cause hairline cracks in the copper track which are difficult to locate.

'Pozidriv' Screws

Special screwdrivers are required for use with 'Pozidriv' headed fixing screws. 'Pozidriv' screwdriver No 1 is suitable for screws up to metric size M3, screws larger than this require a 'Pozidriv' screwdriver No. 2. The use of any other type of screwdriver can result in severe damage to the screwhead.

Heatsink Components

Sufficient heatsink compound (Dow-Corning Type 340 Part No. HM00405) must be applied between the component, insulating washers and heatsink surface to provide a good thermal path.

Connector Pin Cleaning

Under no circumstances should connector pins be cleaned using any abrasive or corrosive agent. Grease or dust should be removed by use of a cleaning fluid such as RS Components Ltd. Catalogue No. 554/175.

Soldering

Soldering operations on PWBs should be kept to a minimum and should perferably be carried out using a low voltage DC soldering iron with an earthed bit. This type of soldering iron MUST be used when replacing FETs or C-MOS integrated circuits. Always ensure that the holes in the printed circuit track are clear of solder before fitting components and check that tracks are clean before applying the soldering iron or solder. The amount of solder and the dwell time of the soldering iron should be kept to a minimum. To reduce the risk of damage to components heatshunts should be used wherever possible. Do not use a permanent magnet soldering iron in the vicinity of coils with ferrite cores.

ROUTINE FREQUENCY ADJUSTMENT

Although the crystal oscillators used in this equipment are extremely accurate and reliable, it must be borne in mind that quartz crystals are subject to 'ageing' and circuits incorporating them therefore require periodic readjustment. This requirement is not affected by the amount of use given to the equipment, 'ageing' occurs even during careful storage. The effects are at a maximum with new crystals, becoming less significant over their life but, to ensure optimum performance the FREQUENCY COUNT in Section 2 must be carried out on installation and thereafter, as a matter of routine, at intervals of six months.

CRYSTAL INFORMATION

For details of crystals see 'CRYSTAL INFORMATION', Section 2.

CONSTRUCTION

The equipment is housed in a steel case, the vertical sides are each formed by an extruded aluminium heatsink and a steel cover encloses the front.

All connections, except the power supply, are made on the connector panel at the base of the unit, and the AC supply lead is routed from the rear of the unit to the connector panel enabling all cables to emerge on one side of the equipment.

With the cover removed all boards, except the transmitter, are accessable as is the rear of the connector panel. The transmitter board is housed in its own compartment which is accessed by removal of the transmitter cover.

The equipment is designed to be wall mounted in a steel cradle, two lugs at the top rear of the unit locate in the cradle and the unit is secured by an M5 screw.

EQUIPMENT ACCESS

WARNING

Before removing the cover or any of the PWBs ensure that the transceiver is disconnected from the power supply.

Tools Required:
Flat blade screwdriver, ¼ in
'Pozidriv' screwdriver No 1 and No 2
Box spanner, M5
Trimming Tool AT00007

Front Cover

1. Remove the 4 x M5 screws which secure the front cover to the unit.
2. Lift the cover from the unit.

Transformer Cover

1. Remove the mains input fuse [0] FS1 (See Fig. 4.2)
2. Remove the 2 x M3 screws which secure the transformer cover to the chassis.
3. Lift the transformer cover from the unit.

Transmitter Cover

1. Loosen the 6 x M3 screws which secure the transmitter cover to the chassis.
2. Lift the transmitter cover from the chassis.

Regulator Board

1. Lift off the regulator output connection (orange lead – pin 8).
2. Unsolder the remaining board connections.
3. Remove the 4 x M3 screws which secure the board to the chassis.
4. Carefully remove the PWB.

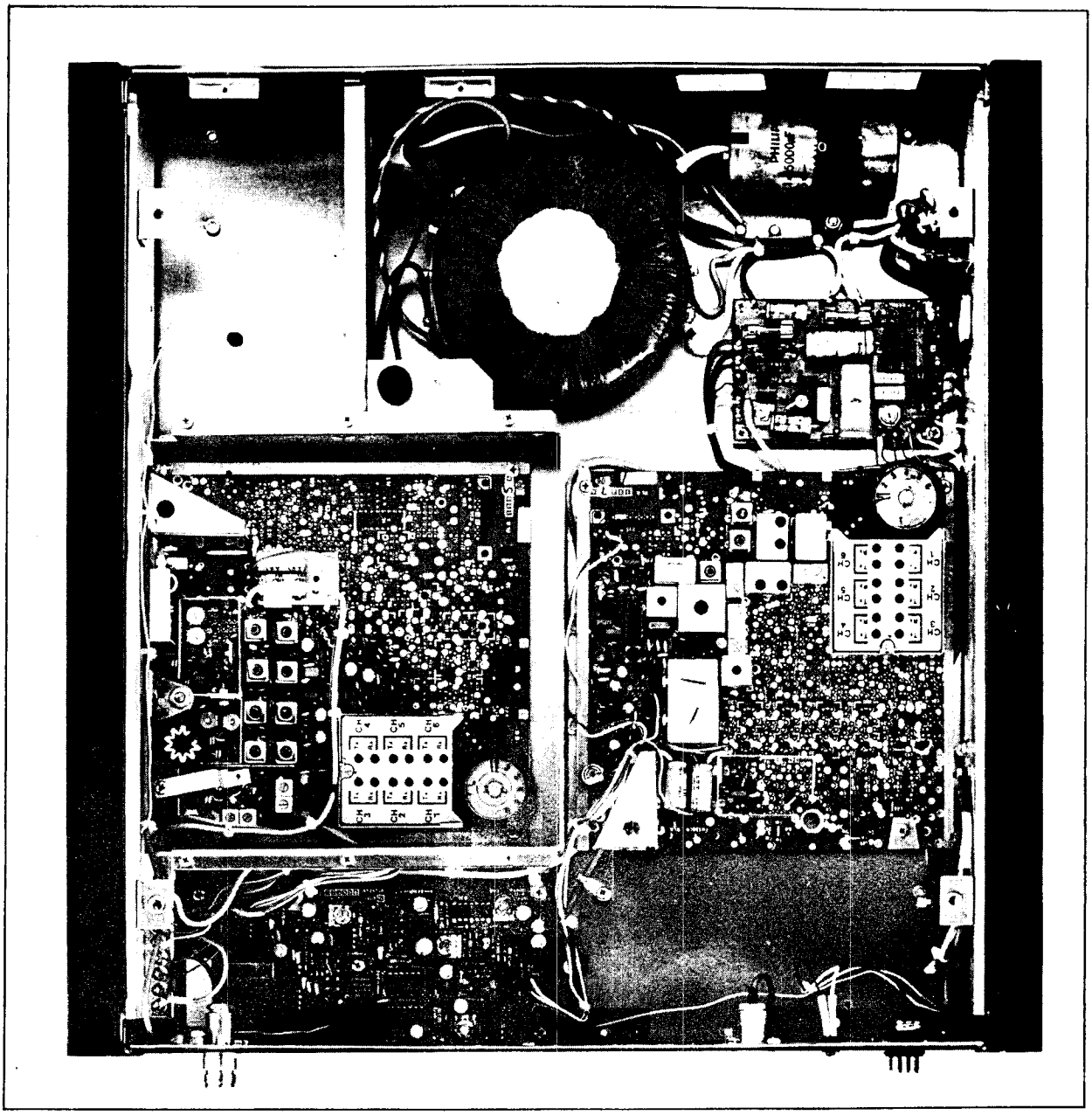

Fig 4.1 F496 Interior View

Receiver Board

1. Disconnect SKF from the control board and remove the 4 x M3 screws which secure the antenna socket to the connector panel.
2. Remove the 4 x M3 screws which secure the receiver board to the chassis.
3. Carefully remove the PWB.

Transmitter Board

1. Remove the transmitter board cover and the 2 x M3 screws which secure the board to the chassis.
2. Remove the 4 x M3 screws which secure the antenna socket to the connector panel.
3. Remove the 5 x M4 screws which secure the Tx heatsink to the chassis then carefully remove the Tx heatsink (with board attached) from the unit.

Control Board

1. Disconnect the 2 multiway connectors SKE and SKF and the thermal shutdown connection (yellow lead – pin 2) from the board.
2. Remove the 5 x M3 screws which secure the board to the chassis and, if applicable, the two clips which retain SKC (FACILITIES).
3. Carefully remove the PWB.

Feedthrough Capacitors

1. Remove the control board.
2. Remove the 2 x M3 screws which secure the feedthrough assembly to the chassis.
3. Carefully remove the feedthrough assembly.

Replacement Procedure

To refit the boards, feedthrough assembly and cover carry out the removal procedure in reverse, ensuring that wire looms are not fouled, connectors are correctly fitted and securing screws are tight.

TEST EQUIPMENT

The following is a list of suitable test equipment for the alignment, fault location and repair of this equipment. Equivalent types may be used, provided that due corrections are made for any differences in characteristics, particularly input and output impedances.

Description	Type
DC Power Supply Unit 10-30V, 10A (with integral ammeter)	Farnell H60/25
RF Power Meter 50 Ω	Bird Termaline 6154
Multimeter	Avometer 8
Signal Generator	Hewlett-Packard 8640B
Modulation Meter	Radiometer AFM2
Frequency Counter	Racal 9915
AF Generator	Marconi TF2100/TF2160
AF Voltmeter	Hewlett-Packard 400FL
SINAD Meter	Hewlett-Packard 333A
Oscilloscope	Gould Advance OS1000A
Marker oscillator 10,7 MHz	PT 507
RF Signal Sampler	Bird 4275
RF Fuse	Marconi TM9884

TEST PROCEDURE

Note: On multichannel equipment the channel switches are housed on the receiver and transmitter boards; it is therefore, necessary to gain access to these boards in order to change channel.

1. **Preliminaries**

   Remove the cover from the unit as described under EQUIPMENT ACCESS and disconnect the spade connector from pin 8 of the regulator board.

2. **AC Supply**

   (a) Check that the correct fuse values are fitted in the equipment:

[0]FS1	Chassis (AC Input)	2A (240V); 3,15A (115V)-Time lag
[1]FS1	Regulator Board	10A
[1]FS2	Regulator Board	10A

   (b) Check that the AC supply transformer [0]T1 primary windings are correctly wired for the supply voltage used.

   (c) Connect the unit to the AC supply and check that LED2 (ON AC–Green) on the regulator board and LED1 (POWER ON–Green) on the connector panel are lit.
   Disconnect the AC supply.

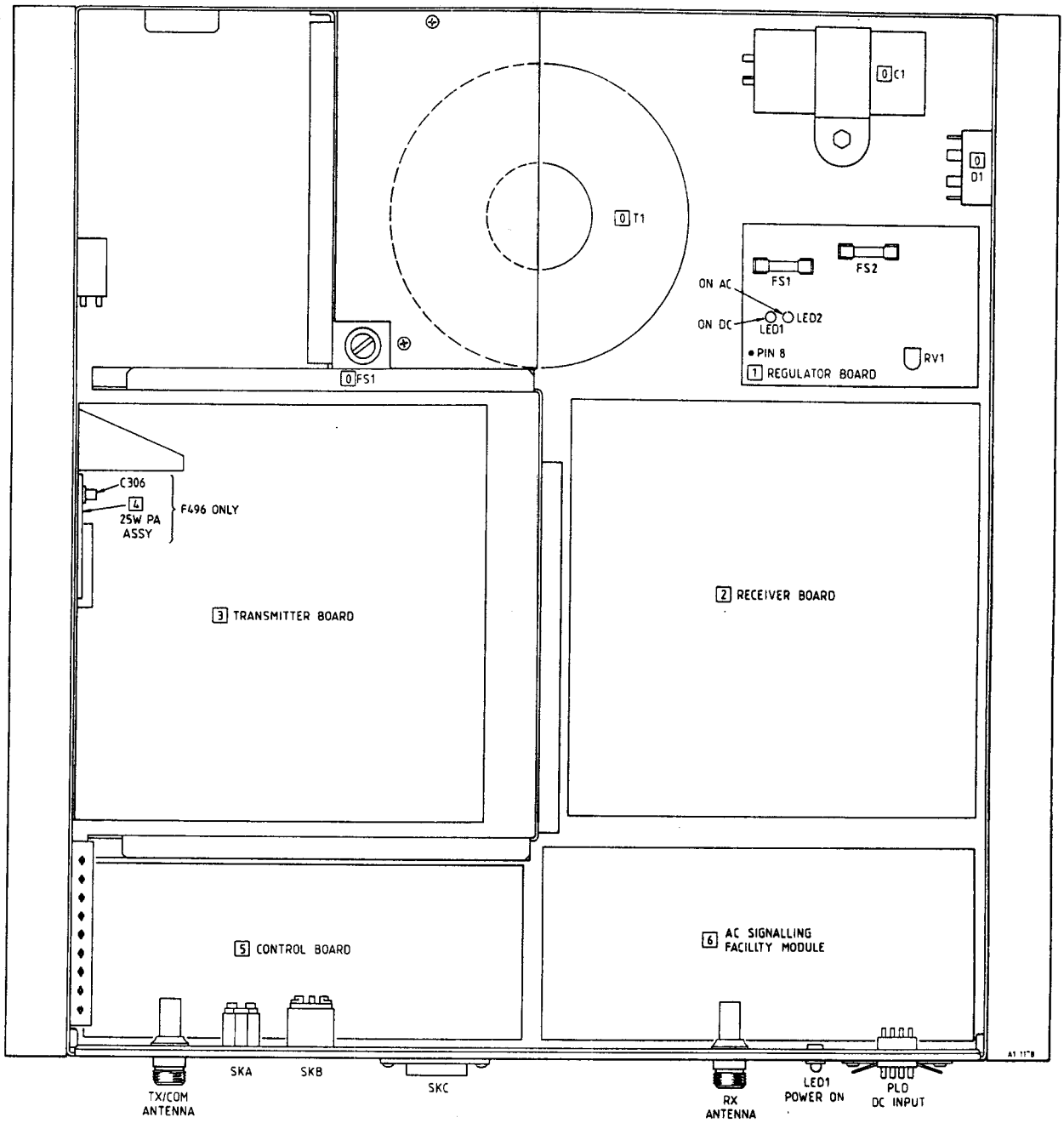

Fig 4.2 Transceiver Layout

3. DC Supply

(a) Set the DC PSU output voltage as follows:

12V DC Units – 13,8 ±0,2V DC
24V DC Units – 26,4 ±0,2V DC

With reference to Fig. 4.3 Connect the PSU to PLD (DC INPUT) on the control panel.

Note: Where a +12V DC standby facility is used an input voltage of less than +13,8V DC may result in reduced RF Power Output.

(b) Check that LED1 (ON DC – Red) on the regulator board and LED1 (Green) on the connector panel are both lit.

(c) Where applicable connect the unit to the AC supply and check that LED1 (Red) on the regulator board goes out and LED2 (Green) lights.

4. Regulator Output

(a) Check that the voltage reading at pin 8 of the regulator board is as follows

Power Output Code	Regulator Output Voltage
Code 1 (25W)	15 ± 0,2V DC
Code 2 (15W)	13,5 ± 0,2V DC
Code 3 (10W)	13,5 ± 0,2V DC
Code 4 (6W)	13,5 ± 0,2V DC
Code 5 (1W)	12,8 ± 0,2V DC (F496 only)

Adjust RV1 (SET VOLTS) on the regulator board, if necessary, to obtain the correct reading.

(b) Re-connect the spade connector to pin 8 of the regulator board.

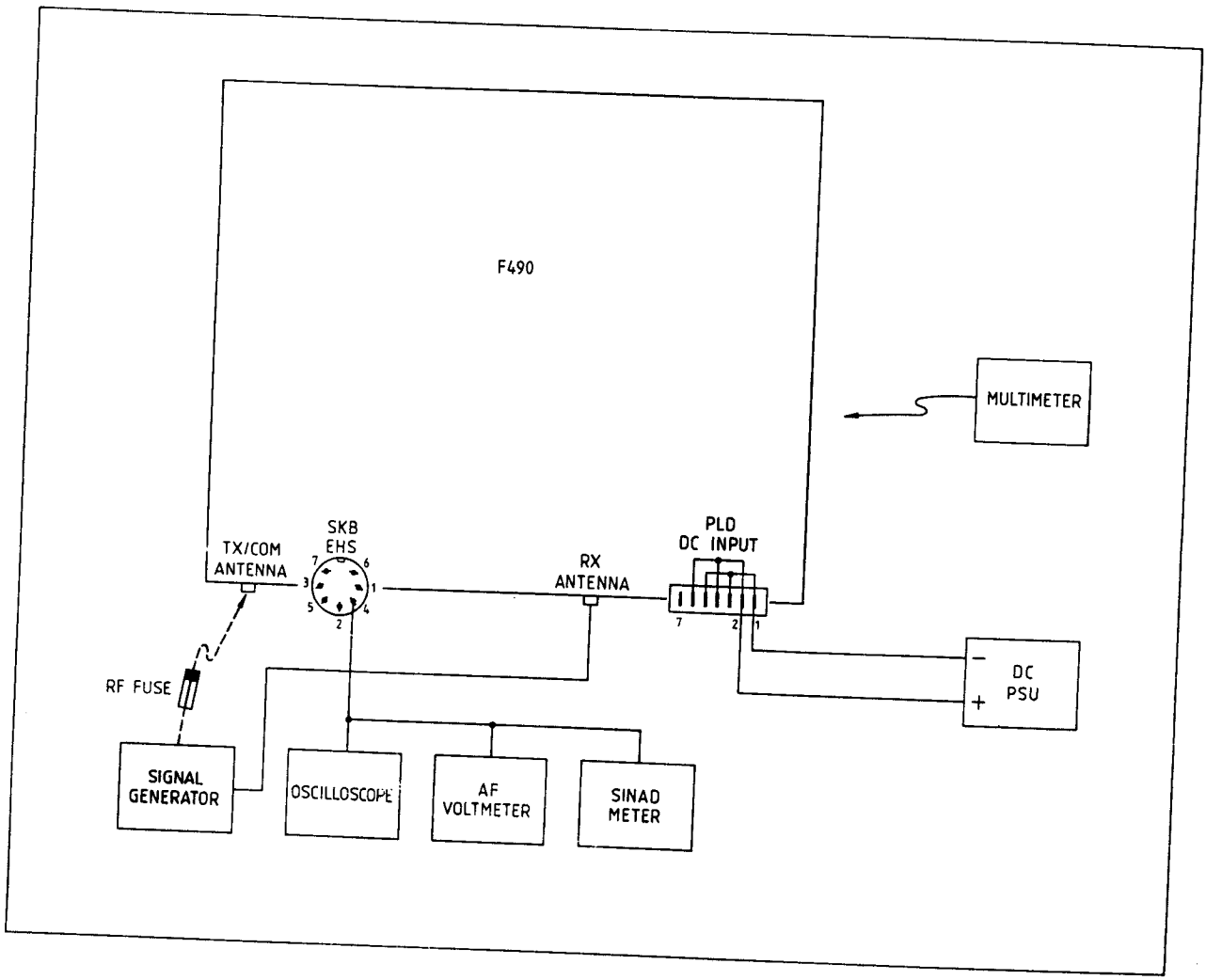

Fig 4.3 Receiver Test Circuit

Note: Peak system deviation varies with channel spacing:

Channel Spacing (S) 12,5 kHz - Peak Deviation 2,5 kHz
Channel Spacing (R) 20 kHz - Peak Deviation 4 kHz
Channel Spacing (V) 25 kHz - Peak Deviation 5 kHz

N	Modulation Meter	[3] RV4	Reduce AF input level to 2mV; adjust for 60% peak system deviation

Disconnect all test equipment

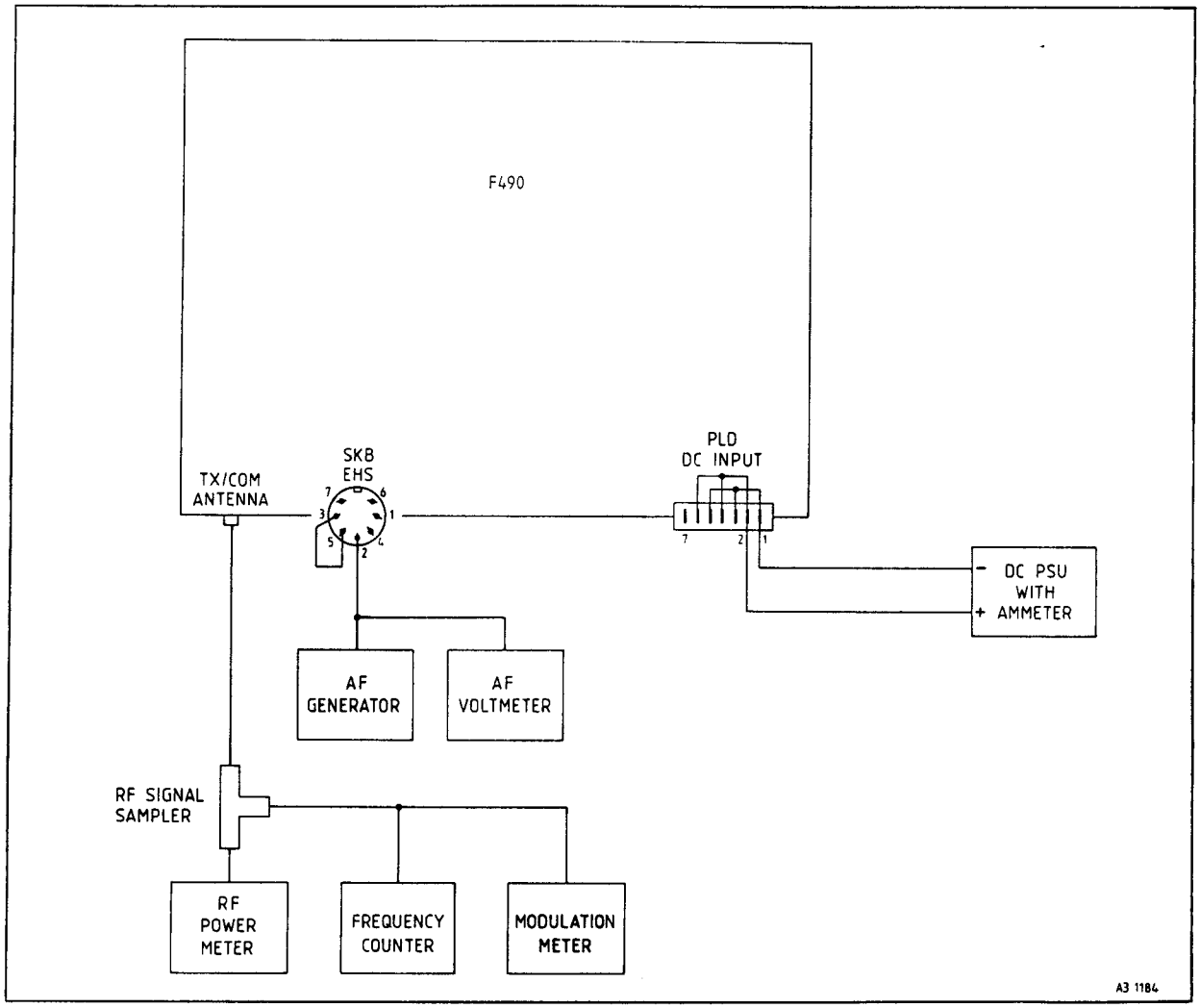

Fig 4.8 Transmitter Test Circuit

7. Control Module Alignment

(a) Adjust [5] RV2 (Tx 600Ω SENS) to give the required audio sensitivity. Where applicable set [5] RV3 (Rx 600Ω O/P LEVEL) to give the required audio level (normally -6 dbm for 60% peak system deviation at 1 kHz).

(b) Where applicable, make T/T TEST Link, check that LED1 (T/T) is lit and carry out the following procedure:

(i) Connect the signal generator to the RX ANTENNA socket and loosely couple the modulation meter to the TX/COM ANTENNA socket.

(ii) Set the signal generator output to channel frequency at 1mV modulated by 1 kHz, 40% peak system deviation.

(iii) Check that LED2 (TX) is lit and adjust the T/T LEVEL potentiometer to give 60% peak system deviation on the modulation meter.

(iv) Disconnect all test equipment and remove the T/T TEST Link.

(c) AC Signalling Control Module (AT28829/—) Only

Note: The notch filters and detector tune filter are aligned in the factory and should not normally require adjustment. If, however, excessive keying tone is present on the transmitter modulation or the transmitter cannot be keyed from the Controller the following alignment may be carried out.

(i) Connect the AF generator set to 2970 Hz ± 1 Hz at –20 dbm to SKA as follows:

SKA pins 1 and 3–2 wire version
SKA pins 4 and 5–4 wire version

Note: An M80 series Controller may be used to generate the 2970 Hz tone.

(ii) Connect the AF Voltmeter to TP3,2 and 4 in turn and adjust RV6,5,7 as follows:

Notch 2	TP3	Adjust RV6 for minimum
Notch 1	TP2	Adjust RV5 for minimum
Detector Tune	TP4	Adjust RV7 for maximum

On completion disconnect all test equipment.

(iii) Connect the signal generator on channel frequency, modulated at 20% by 2970 Hz ± 1 Hz at a level of 1 mV to the receiver input.

(iv) Connect the AF Voltmeter to TP5 and adjust RV6 for a minimum reading.
On completion disconnect all test equipment.

(d) AC Signalling Control Module (AT28829/01) Only

Note: The hybrid circuit requires balancing for the particular 600Ω line to be used, therefore, this procedure should be carried out with the base station and M80 Series Controller fully installed.

(i) Make LK3 (SQ DEF) and connect the AF Voltmeter to TP1

(ii) Adjust RV8 and RV9 for a minimum reading

(iii) Disconnect the AF Voltmeter and remove LK3

Alternatively, the hybrid circuit can be balanced using an engineers handset as follows:

(i) Disconnect one end of R83

(ii) Make LK2 (EHS INTERCOM) and LK3 (SQ DEF)

(iii) Connect the EHS and operate the PTT switch-Receiver noise should now be audible.

(iv) Adjust RV8 and RV9 for minimum receiver noise.

(v) Disconnect LK2, 3 and the EHS and reconnect R83.

(e) AC Signalling Facility Module (AT28830) Only

Note: The FSK demodulator is preset in the factory and should not normally require adjustment. If, however, difficulty is experienced selecting T/T, Squelch Defeat or Tx inhibit via the controller the following alignment may be carried out.

(i) Connect the AF oscillator set to 2420 Hz as follows:
SKA pins 1 and 3-2 wire version
SKA pins 4 and 5-4 wire version

(ii) Set the AF oscillator to give a level of 40 mV RMS measured at TP1

(iii) Set RV1 fully clockwise

(iv) Set the oscilloscope sensitivity to 1V/division, DC coupled and connect to TP2, slowly rotate RV1 counter-clockwise until a High to Low logic transition occurs.

(v) Slowly reduce the AF oscillator frequency until a Low to High transition occurs, check that the AF oscillator frequency is greater than 2370 Hz.

Note: If an oscilloscope is not available the logic transitions at TP2 can be monitored using an AVO meter.

SELECT-ON-TEST PROCEDURES

The following 'select-on-test' procedures will only need to be carried out when certain components (as detailed) are changed. The values of resistance are selected from the ranges given in the Parts List.

Receiver Board [2]

R176 (F494), R186 (F496) (10V Regulator) – Selected when any of the 10V regulator components are changed.

Commencing with a 100Ω resistor select a value of resistance which gives a voltage reading of 9,8–10,2V DC wrt -ve at PLF pin 7.

Increasing the resistance will increase the voltage at PLF pin 7.

Transmitter Board [3]

R95 (F494) R111 (F496) (Pre-emphasised Amplifier) – Selected when [2] TR21, TR22, D9, D10 are changed.

Connect an AF generator, set to 20mV at 1 kHz to [0]SKB pin 2. Commencing with a 33Ω (F494), 22Ω (F496) resistor select a value of resistance which gives symmetrical clipping, measured on an osciiloscope, at [3] TP9.

MC490 Control Module AT28824 [5]

R6 – Selected when TR3 is changed.

Connect an AF generator set to 2mV at 1kHz across [5] PLC pins 14 and 15. With no resistor fitted in the R6 position key the transmitter and set RV2 to give 300mV measured at [5] PLE pin 9. Increase the AF generator output by 10db. Commencing with a 5k6 resistor select a value of R6 which gives a reduction of between 0,5 and 2,5 db in the Tx AF output level measured at [5] PLE pin 9.

SECTION 5
PARTS LIST

NOTATION

In the following Parts List component values are designated as follows:

Capacitors — Values given in micro Farads unless otherwise stated

22	=	22 microFarad	$(F \times 10^{-6})$
22n	=	22 nanoFarad	$(F \times 10^{-9})$
22p	=	22 picoFarad	$(F \times 10^{-12})$

Fractional values shown thus:

2μ2	=	2,2 microFarad	=	$(2,2 \times 10^{-6})F$
2n2	=	2,2 nanoFarad	=	$(2,2 \times 10^{-9})F$
2p2	=	2,2 picoFarad	=	$(2,2 \times 10^{-12})F$

Resistors — Values given in Ohms unless otherwise stated

22	=	22 Ohms	
22k	=	22 Kilohms	$(\text{Ohms} \times 10^{3})$
22M	=	22 Megohms	$(\text{Ohms} \times 10^{6})$

Fractional values are shown thus:

2Ω2	=	2,2 Ohms		
2k2	=	2,2 Kilohms	=	$(2,2 \times 10^{3})$ Ohms
2M2	=	2,2 Megohms	=	$(2,2 \times 10^{6})$ Ohms

ORDERING OF SPARE PARTS

When ordering spares, please quote the description and part number of the item and the part number of the sub-assembly on which it is used together with the equipment code number given on the identity plate fixed to the rear of the equipment.

The right is reserved to fit alternative types of components with equal or improved performance to those quoted in the Parts List.

ABBREVIATIONS

aluminium	al	hexagonal	hex
cadmium	cad	metal film	m. film
carbon film	c.film	miniature polyester	pes
ceramic	cer	printed wiring board	PWB
cheesehead	ch	polyester	poly
composition	comp	pozidriv	pozi
countersunk	csk	steel	st
electrolytic	elec	tantalum	tant

For Service Manuals Contact
MAURITRON TECHNICAL SERVICES
8 Cherry Tree Rd, Chinnor
Oxon OX9 4QY
Tel:- 01844-351694 Fax:- 01844-352554
Email:- enquiries@mauritron.co.uk

PARTS LIST

VHF BASE STATION TYPE F494

UHF LINK/BASE STATION TYPE F496

Cct. Ref	Description	Part. No.	Remarks
SUB ASSEMBLIES			
	PCB assembly, VHF Tx	AT28751/–	Module [3], F494 — See headed list
	PCB assembly, VHF Rx	AT28752/–	Module [2], F494 — See headed list
	PCB assembly, UHF Tx	AT28727/–	Module [3], F496 — See headed list
	PCB assembly, UHF Rx	AT28728/–	Module [2], F496 — See headed list
	PCB assembly, regulator	AT28724/–	Module [1] — See headed list
	Link/Systems control PCB	AT28725/01	
	Link/Systems (with T/T) control PCB	AT28817	
	DC Signalling control PCB	AT28726/01	Module [5]
	MC490 control PCB	AT28824	See Part 2
	AC Signalling control PCB	AT28829/–	
	AC Signalling facility PCB	AT28830/–	
	Microphone/controller	AT29703	See MC490 Parts list
	Loudspeaker Assembly	AT10877/02	(Earlier versions) See headed list
	Loudspeaker Assembly	AT14637/01	
ELECTRICAL ITEMS			
C1	Capacitor 15,000μF–10% +30% elec	PS68022	
D1	Bridge rectifier 26MB40A	9337 195 10682	
FB1	Ferrite bead	FC34450	F496
FS1	Fuse 2A, time lag	FF99036	For 240V
FS1	⚠Fuse 3,15A, time lag	FF99037	For 115V
IC1	IC7812, regulator	FU99109	
LED1	LED, green	FV05882	
LK8	Diode 1N4148	FV05808	
PLA	Plug 5-way	FP14431	
PLC	Plug 15-way, fixed	FP99013	
PLD	Plug 7-way	FP16816	(DC input)
SKD	Socket 7-way	FS46814	
T1	⚠Transformer	AL21461	
	Thermistor and eyelet assembly comprising:	AT13986/01	
TH1	Thermistor 1k at 80°C	PL23142	
	Terminal ring tongue	FT10724	
TR1, 2	Transistor BDV92	FV05597	
	Plug, N, free, elbow, 50Ω	FP99113	F496 – 1/Tx common antenna
	Plug, UHF, free, str, 50Ω	FP99117	F494 Rx antenna, Tx common antenna
	Lead assembly, AC	AT36771	
	⚠Lead assembly, AC supply	AT36772	
	Lead assembly, Regulator	AT36745	
	Lead assembly, Rx antenna	AT36799	F494
	Lead assembly, Rx antenna	AT36781	F496
MISCELLANEOUS			
	Blanking plate	BT20183	1/SKC
	Cable clip	QA02218	2/AC supply cable
	Chassis assembly	AT14204	
	Clip 1½ in	BT16676	1/C1
	Cover Assembly, equipment comprising:	AT14233/01	Philips
	Cover, equipment	BT15838/01	Cover, equipment, less label
	Fix, push on	QA01488	
	Label, Philips	BT38071	For AT14233/01
	Cover, fixing bracket	BT11346	2/Regulator heatsink
	Fitting kit, wall mounting comprising:	AT29625	
	Cradle	BT19013	
	Scr, sdriv, pan, st, M5 x 10 mm	QJ11932/X	1/Unit – cradle
	Fuse bracket	BT11353	

Cct. Ref	Description	Part No.	Remarks
MISCELLANEOUS (Cont'd)			
	⚠ Fuseholder, panel mounting	FH02880	1/FS1
	⚠ Fuse label	BT38028	1/Transformer cover
	Grommet ¾ in	FG02617	1/600Ω line hole
	Handle	FC99425	
	Hood	FC99421	1/PLC
	Installation instructions	TP835	
	Insulating bush	QA05638	1/TR1,2
	Insulating bush	QA99024	1/IC1
	Insulating washer	QA99025	1/IC1
	Label, information	BT38243	
	Label, information	BT37318	
	Label, information	BT38088/18	F494 BT approval
	Label, information	BT38088/19	F496 BT approval
	Label, FTZ (A0 Band)	BT38156/08	F494 German Market
	Label, FTZ (E0 Band)	BT38156/09	F494 German Market
	Label, FTZ	BT38156/10	F496 German Market
	⚠ Label, safety/warning	BT37403/01	1/Transformer cover
	⚠ Label, safety/warning	BT37404/01	1/Transformer cover
	⚠ Label, safety/warning	BT37405/01	1/AC supply cable
	⚠ Label, warning	BT37434	1/AC supply cable
	LED mounting clip and ring	QA99006	1/LED 1
	⚠ AC Supply cover	BT15839	
	Mica insulator	QA05639	1/TR1,2
	PCB pillar	FB00655	
	Pin, black, zn,	QA08333/K	1/Regulator heatsink
	Regulator heatsink	BJ37117	
	Screen lid assembly	AT14315	
	Spring	BT50516	F496
	Strain relief bush	FG02721	1/Chassis – AC supply cable
	Ty-rap	QA04427	1/Rx Ant, 1/Tx PCB
OPTIONAL ITEMS			
	Engineers handset	FH00653	Servicing aid
	Eurorack mounting kit	AT29634	Non-runner version
	Eurorack mounting kit	AT85307	Runner version
FIXINGS			
	Screw, special	BT08209	4/Unit cover
	Scr, sdriv, pan, st, M2,5 x 6 mm	QJ11945/B	2/PLD
	Scr, sdriv, pan, st, M2,5 x 8 mm	QJ11946/B	1/IC1
	Scr, pozi, pan, st, M3 x 6 mm	QJ11901/X	2/AC supply cover; 3/Rx antenna skt; 4/Control PCB; 3/Tx antenna skt; 4/Regulator; 4/Rx PCB; 6/Tx lid; 1/TH1; 2/Plate; 2/Handles; 4/Signalling PCB; 4/Facility PCB; 2/Tx PCB–chassis
	Scr, sdriv, pan, st, M3 x 10 mm	QJ11903/X	1/Rx antenna skt; 1/Tx antenna skt
	Scr, sdriv, pan, st, M3 x 20 mm	QJ11906/K1	1/TR1,2
	Scr, sdriv, pan, st, M4 x 12 mm	QJ11919/X	1/P clip; 2/T1
	Scr, sdriv, pan, st, M4 x 12 mm	QJ11919/K1	5/Tx heatsink; 5/Reg heatsink
	Scr, sdriv, pan, st, M4 x 30 mm	QJ11923/K1	1/D1 – heatsink
	Scr, sdriv, pan, st, No4 x ¼ in	QJ08275/X	1/Cover – Osc. Screen (F494) 1/Tx Osc. Lid, 1/Rx Osc. Lid (F496)
	Scr, pozi, tap, st, No4 x 8 mm	QJ08241/X	4/Cover fixing bracket
	Nut, hex, st, M2,5	QA11604/B	2/PLD
	Nut, hex, st, M3	QA11605/X	4/Rx antenna skt; 4/Tx antenna skt; 1/TR1; 2/Plate
	Nut, hex, st, M4	QA11607/X	1/Clip; 1/D1
	Washer, st, M3	QA15005/X	1/Tx antenna skt; 1/Rx antenna skt
	Washer, st, M4	QA15007/X	1/P clip; 1/D1
	Washer, nylon	QA14905	1/Rx PCB
	Washer, sp, M4	QA13517	

PCB ASSEMBLY REGULATOR [1]
AT28724/–
/01 – AC with 24V DC Standby
/02 – AC with 12V DC Standby
/03 – 24V DC only

Cct. Ref	Description				Part No.	Remarks
SEMICONDUCTORS						
TR1,2	Transistor BC 547B				FV05891	TR2/01,/02
D1	Diode MR751				FV08961	
D2,3	Diode si. Rect. 0,2A				FV05892	/01,/02
RESISTORS						
R1,2	6Ω8	±5%	0,25W	c.film	PM01410	
R3,4	0Ω1	±10%	2,5W	WW	PL40113	
R5	1k2	±5%	0,25W	c.film	PM01437	
R6	680	±5%	1,6W	m.film	PL51201	
R7	15k	±5%	0,25W	c.film	PM01450	
R8	1k2	±5%	1,6W	m.film	PL51202	/02
R8,9	2k2	±5%	1,6W	m.film	PL51203	R8/01,/03; R9/01
R10	1k2	±5%	1,6W	m.film	PL51202	/01,/02
R11	270	±5%	1,6W	m.film	PL51186	/01,/02
R12	18k	±5%	0,25W	c.film	PM01451	/01,/02
R13	1k	±5%	0,25W	c.film	PM01436	/01,/02
RV1	470	±20%	Lin, Pot,	skel	PL99006	
CAPACITORS						
C1	220n	±10%	100V	poly	PQ99508	
C2,3	100n	±10%	100v	poly	PQ99501	
C4	100	−10%+50%	40V	elec	PS99529	
C5	680	−10% +50%	40V	elec	PS99530	/01,/03
C6	100	−10% +50%	40V	elec	PS99529	/01,/02
MISCELLANEOUS						
FS1,2	Fuse 10A				FF99021	FS2/01,/02
—	Fuseholder				FH99100	For FS1,2
RLA	Relay				FR01255	/01,/02
LED1	LED, red				FV05861	
LED2	LED, green				FV05933	/01,/02

PCB ASSEMBLY VHF Rx [2]
AT28752/–

/01 Single channel, 25 kHz channel spacing
/02 Single channel, 20 kHz channel spacing
/03 Single channel, 12,5 kHz channel spacing
/07 Single channel, 25 kHz channel spacing
/08 Single channel, 20 kHz channel spacing
/09 Single channel, 12,5 kHz channel spacing
/13 Single channel, 25 kHz channel spacing
/14 Single channel, 20 kHz channel spacing
/15 Single channel, 12,5 kHz channel spacing
/19 Single channel, 12,5 kHz channel spacing

/04 Six channel, 25 kHz channel spacing
/05 Six channel, 20 kHz channel spacing
/06 Six channel, 12,5 kHz channel spacing } A band
/10 Six channel, 25 kHz channel spacing
/11 Six channel, 20 kHz channel spacing
/12 Six channel, 12,5 kHz channel spacing } B band (/09 B and M2 Bands)
/16 Six channel, 25 kHz channel spacing
/17 Six channel, 20 kHz channel spacing
/18 Six channel, 12,5 kHz channel spacing } E Band

M1 Band

SUB ASSEMBLIES

Screen Assembly	AT14709		See headed list
Cover Assembly	AT14727		
Capacitor/Coil Assembly	AT14728/04	A Band	
Capacitor/Coil Assembly	AT14728/05	B & M2 Bands	
Capacitor/Coil Assembly	AT14728/06	E Band	
Capacitor/Coil Assembly	AT14728/07	M1 Band	

SEMICONDUCTORS & ICS

IC1	IC IF amp & discriminator	FU07680	
IC2			Not Used
IC3	IC741	FU99073	
TR1	Transistor J309	FV40828	
TR2	Transistor J310	FV05901	
TR3	Transistor 2N5486	FV09280	

Cct. Ref	Description	Part No.	Remarks

SEMICONDUCTORS & ICS (Cont'd)

TR4,5	Transistor MPS918-18	FV05893	
TR6	Transistor BC547B	FV05891	
TR7	Transistor MPS-A13	FV08935	
TR8-10			Not Used
TR11,12	Transistor MPS918-18	FV05893	
TR13	Transistor MPS-A13	FV08935	
TR14-16	Transistor BC547B	FV05891	
TR17-36			Not Used
TR37,38	Transistor BC547	FV05889	
TR39	Transistor TIP32	FV08940	Part of AT14709
TR40	Transistor BF2458	FV05900	
D1-5	Diode 1N4148	FV05808	
D6-12			Not Used
D13	Zener diode ZF8,2	FV08030	
D14	Diode 1N4148	FV05808	

RESISTORS

R1	10	±5%	0,25W	c.film	PM01412	
R2	680	±5%	0,25W	c.film	PM01434	
R3	1k2	±5%	0,25W	c.film	PM01437	
R4	820	±5%	0,25W	c.film	PM01435	
R5	100	±5%	0,25W	c.film	PM01424	
R6	4k7	±5%	0,25W	c.film	PM01444	
R7	39k	±5%	0,25W	c.film	PM01455	
R8	3k3	±5%	0,25W	c.film	PM01442	
R9	27k	±5%	0,25W	c.film	PM01453	
R10	5k6	±5%	0,25W	c.film	PM01445	
R11	8k2	±5%	0,25W	c.film	PM01447	
R12	3k9	±5%	0,25W	c.film	PM01443	
R13	100	±5%	0,25W	c.film	PM01424	
R14	680	±5%	0,25W	c.film	PM01434	
R15	470	±5%	0,25W	c.film	PM01432	
R16,17	1k8	±5%	0,25W	c.film	PM01439	
R18	47k	±5%	0,25W	c.film	PM01456	
R19	10k	±5%	0,25W	c.film	PM01448	
R20	1k2	±5%	0,25W	c.film	PM01437	
R21	3k3	±5%	0,25W	c.film	PM01442	
R22	100k	±5%	0,25W	c.film	PM01460	
R23	22	±5%	0,25W	c.film	PM01416	
R24	5k6	±5%	0,25W	c.film	PM01445	
R25	10k	±5%	0,25W	c.film	PM01448	
R26	6k8	±5%	0,25W	c.film	PM01446	
R27	4k7	±5%	0,25W	c.film	PM01444	
R28	5k6	±5%	0,25W	c.film	PM01445	
R29,30	82k	±5%	0,25W	c.film	PM01459	
R31	4k7	±5%	0,25W	c.film	PM01444	
R32,33						Not Used
R34	4k7	±5%	0,25W	c.film	PM01444	
R35-41						Not Used
R42-47	2k2	±20%	posistor		PL23133	
R48-53	680	±5%	0,25W	c.film	PM01434	R49-53 Six channel
R54,55	4k7	±5%	0,25W	c.film	PM01444	
R56	820	±5%	0,25W	c.film	PM01435	A,B & M2 Bands
R56	560	±5%	0,25W	c.film	PM01433	E & M1 Bands
R57	560	±5%	0,25W	c.film	PM01433	
R58	2k7	±5%	0,25W	c.film	PM01441	A,B & M2 Bands
R58	4k7	±5%	0,25W	c.film	PM01444	E & M1 Bands
R59	10	±5%	0,25W	c.film	PM01412	
R60	150	±5%	0,25W	c.film	PM01426	A,B & M2 Bands
R60	220	±5%	0,25W	c.film	PM01428	E & M1 Bands
R61	560	±5%	0,25W	c.film	PM01433	
R62	15k	±5%	0,25W	c.film	PM01450	
R63	8k2	±5%	0,25W	c.film	PM01447	
R64	4k7	±5%	0,25W	c.film	PM01444	
R65	2k2	±5%	0,25W	c.film	PM01440	12,5 kHz channel spacing
R65	4k7	±5%	0,25W	c.film	PM01444	20 & 25 kHz channel spacing

Cct. Ref	Description				Part No.	Remarks
RESISTORS (Cont'd)						
R66	100k	±5%	0,25W	c.film	PM01460	
R67	1k2	±5%	0,25W	c.film	PM01437	
R68						Not Used
R69	470	±5%	0,25W	c.film	PM01432	
R70	4k7	±5%	0,25W	c.film	PM01444	
R71	100	±5%	0,25W	c.film	PM01424	
R72,73	1k	±5%	0,25W	c.film	PM01436	
R74	4k7	±5%	0,25W	c.film	PM01444	
R75	1k	±5%	0,25W	c.film	PM01436	
R76,77	100	±5%	0,25W	c.film	PM01424	
R78	1k	±5%	0,25W	c.film	PM01436	
R79	47k	±5%	0,25W	c.film	PM01456	25 kHz channel spacing
R80	2k7	±5%	0,25W	c.film	PM01441	
R81	1k5	±5%	0,25W	c.film	PM01438	12,5 kHz channel spacing
R81	1k2	±5%	0,25W	c.film	PM01437	20 & 25 kHz channel spacing
R82	4k7	±5%	0,25W	c.film	PM01444	
R83	3k3	±5%	0,25W	c.film	PM01442	
R84	1k5	±5%	0,25W	c.film	PM01438	12,5 kHz channel spacing
R84	820	±5%	0,25W	c.film	PM01435	20 & 25 kHz channel spacing
R85	3k9	±5%	0,25W	c.film	PM01443	12,5 kHz channel spacing
R85	2k7	±5%	0,25W	c.film	PM01441	20 & 25 kHz channel spacing
R86-175						Not Used
R176 SOT	100	±5%	0,25W	c.film	PM01424	
	120	±5%	0,25W	c.film	PM01425	
	150	±5%	0,25W	c.film	PM01426	
	180	±5%	0,25W	c.film	PM01427	
	220	±5%	0,25W	c.film	PM01428	See SELECT-ON-TEST
	270	±5%	0,25W	c.film	PM01429	PROCEDURES, Section 4
	330	±5%	0,25W	c.film	PM01430	
	390	±5%	0,25W	c.film	PM01431	
	470	±5%	0,25W	c.film	PM01432	
R177	150	±5%	0,25W	c.film	PM01426	
R178	10k	±5%	0,25W	c.film	PM01448	
R179	470	±5%	0,25W	c.film	PM01432	
R180	150	±5%	0,25W	c.film	PM01426	
R181	470	±5%	0,25W	c.film	PM01432	
R182	2k2	±5%	0,25W	c.film	PM01440	
R183-190						Not Used
R191	1M	±5%	0,25W	c.film	PM01472	
R192	22k	±5%	0,25W	c.film	PM01452	
R193	47k	±5%	0,25W	c.film	PM01456	
R194	2Ω2	±5%	0,25W	c.film	PM01404	
RV1	4k7	±20%	Lin, Pot,	skel	PL03370	
RV2	470	±20%	Lin, Pot,	skel	PL06730	
RV3						Not Used
RV4	10k	±20%	Lin, Pot		PL62112	
CAPACITORS						
C1	12p	±2%	63V	cer plate	PN99569	A Band
C1	15p	±2%	63V	cer plate	PN99570	B & M2 Bands
C1	33p	±2%	63V	cer plate	PN99574	E Band
C1	18p	±2%	63V	cer plate	PN99571	M1 Band
C2	Op56	±10%	500V	cer comp	PN00123	A Band
C2	Op68	±10%	500V	cer comp	PN00124	B & M2 Bands
C2	2p7	±5%	500V	cer comp	PN01121	E Band
C2	Op82	±10%	500V	cer comp	PN00120	M1 Band
C3	12p	±2%	63V	cer plate	PN99569	A Band
C3	15p	±2%	63V	cer plate	PN99570	B & M2 Bands
C3	33p	±2%	63V	cer plate	PN99574	E Band
C3	18p	±2%	63V	cer plate	PN99571	M1 Band
C4	150p	±2%	63V	cer plate	PN99773	A,B & M2 Bands
C4	4n7	±10%	63V	cer plate	PN99813	E & M1 Bands
C5						Not Used
C6,7	4n7	±10%	63V	cer plate	PN99813	
C8-13						Not Used
C14	1n	±10%	63V	cer plate	PN99811	A,B & M2 Bands
C14	4n7	±10%	63V	cer plate	PN99813	E & M1 Bands

See AT14728/–

Cct. Ref	Description				Part No.	Remarks
CAPACITORS (Cont'd)						
C15	4n7	±10%	63V	cer plate	PN99813	
C16	2μ2	±20%	100V	elec	PS99456	
C17	82p	±2%	63V	cer plate	PN99770	
C18,19	4n7	±10%	63V	cer plate	PN99813	
C20	82p	±2%	63V	cer plate	PN99770	
C21,22	4n7	±10%	63V	cer plate	PN99813	
C23	100n	±10%	63V	poly	PQ99511	
C24-26	4n7	±10%	63V	cer plate	PN99813	
C27	1n	±10%	63V	cer plate	PN99811	
C28	27p	±2%	63V	cer plate	PN99764	
C29	120p	±2%	63V	cer plate	PN99806	
C30	4n7	±10%	63V	cer plate	PN99813	
C31,32	100n	±10%	63V	poly	PQ99511	
C33	10p	±2%	63V	cer plate	PN09345	
C34	10	±20%	25V	tant	PS99513	
C35	4n7	±10%	63V	cer plate	PN99813	
C36	120p	±2%	63V	cer plate	PN99806	
C37	56p	±2%	63V	cer plate	PN99768	
C38	1	±20%	35V	tant	PS99502	
C39	4n7	±10%	63V	cer plate	PN99813	
C40	33	±20%	35V	elec	PS99429	
C41	1	±20%	35V	tant	PS99502	
C42	150n	±10%	50V	pes	PQ32333	
C43						Not Used
C44,45	47n	±10%	63V	poly	PQ99514	
C46	2μ2	±20%	100V	elec	PS99456	
C47-55						Not Used
C56	4n7	±10%	63V	cer plate	PN99813	
C57	1n	±10%	63V	cer plate	PN99811	
C58	4n7	±10%	63V	cer plate	PN99813	
C59	2n2	±10%	63V	cer plate	PN99812	
C60	47p	±2%	63V	cer plate	PN99767	
C61	33p	±2%	63V	cer plate	PN99765	A,B & M2 Bands
C61	47p	±2%	63V	cer plate	PN99767	E & M1 Bands
C62	8p2	±Op25	63V	cer plate	PN07337	A,B & M2 Bands
C62	22p	±2%	63V	cer plate	PN99797	E & M1 Bands
C63	3p9	±Op25	63V	cer plate	PN02411	A,B & M2 Bands
C63	6p8	±Op25	63V	cer plate	PN05345	E & M1 Bands
C64	1n	±10%	63V	cer plate	PN99811	
C65	15p	±2%	63V	cer plate	PN99761	A,B & M2 Bands
C65	27p	±2%	63V	cer plate	PN99798	E & M1 Bands
C66	2n2	±10%	63V	cer plate	PN99812	
C67	Op56	±10%	500V	cer comp	PN00123	A,B & M2 Bands
C67	Op82	±10%	500V	cer comp	PN00120	E & M1 Bands
C68	12p	±2%	63V	cer plate	PN99760	A,B & M2 Bands
C68	33p	±2%	63V	cer plate	PN99765	E & M1 Bands
C69,70	4n7	±10%	63V	cer plate	PN99813	
C71,72	2μ2	±20%	35V	tant	PS99503	
C73,74	100n	±10%	63V	poly	PQ99511	
C75	1	±20%	35V	tant	PS99502	
C76	4n7	±10%	63V	cer plate	PN99813	
C77,78	2μ2	±20%	100V	elec	PS99456	
C79	6μ8	±20%	35V	tant	PS99512	
C80-169						Not Used
C170	4n7	±10%	63V	cer plate	PN99813	
C171-185						Not Used
C186	4n7	±10%	63V	cer plate	PN99813	
C187	2p2	±Op25	63V	cer plate	PN01338	A Band
C187	2p7	±Op25	63V	cer plate	PN01342	B & M2 Bands
C187	6p8	±Op25	63V	cer plate	PN05345	E Band
C187	22p	±2%	63V	cer plate	PN99572	M1 Band
C188	3p3	±Op25	63V	cer plate	PN02339	A band
C188	3p9	±Op25	63V	cer plate	PN02411	B & M2 Bands
C188	5p6	±Op25	63V	cer plate	PN04379	E Band
C188	8p2	±Op25	63V	cer plate	PN07337	M1 Band
C189	8p2	±Op25	63V	cer plate	PN07337	A Band
C189	10p	±2%	63V	cer plate	PN09345	B, M1 & M2 Bands
C189	22p	±2%	63V	cer plate	PN99797	E Band

Cct. Ref	Description				Part No.	Remarks
CAPACITORS (Cont'd)						
C190	12p	±2%	63V	cer plate	PN99760	A Band
C190	15p	±2%	63V	cer plate	PN99761	B, M1 & M2 Bands
C190	27p	±2%	63V	cer plate	PN99798	E Band
C191	3p9	±Op25	63V	cer plate	PN02411	A Band
C191	4p7	±Op25	63V	cer plate	PN03354	B & M2 Bands
C191	10p	±2%	63V	cer plate	PN09345	E & M1 Bands
C192	15p	±2%	63V	cer plate	PN99761	A Band
C192	18p	±2%	63V	cer plate	PN99762	B & M2 Bands
C192	39p	±2%	63V	cer plate	PN99766	E Band
C192	27p	±2%	63V	cer plate	PN99798	M1 Band
C193						Not Used
C194	18p	±2%	63V	cer plate	PN99762	A Band
C194	22p	±2%	63V	cer plate	PN99797	B, M1 & M2 Bands
C194	39p	±2%	63V	cer plate	PN99766	E Band
C195	15p	±2%	63V	cer plate	PN99761	
C196	470	±10%	25V	elec	PS45810	
C197	100n	±10%	63V	poly	PQ99511	
C198	4n7	±10%	63V	cer plate	PN99813	
C199	470	±10%	25V	elec	PS45810	
C200	4n7	±10%	100V	cer plate	PN99604	
C201	33p	±2%	63V	cer plate	PN99765	E Band
C202-207						Not Used
C208	4n7	±10%	63V	cer plate	PN99913	

INDUCTORS

L1,2	Coil assembly	AT32126/06	A,B & M2 Bands	See AT14728/–
L1,2	Coil assembly	AT32126/07	E Band	
L1,2	Coil assembly	AT32126/08	M1 Band	
L3	Coil assembly	AT32700/09	A Band	
L3	Coil assembly	AT32700/11	B & M2 Bands	
L3	Coil assembly	AT32701/09	E Band	
L3	Coil assembly	AT32701/12	M1 Band	
L4	Coil assembly	AT32700/01	A Band	
L4	Coil assembly	AT32700/12	B & M2 Bands	
L4	Coil assembly	AT32701/10	E Band	
L4	Coil assembly	AT32701/13	M1 Band	
L5	Coil assembly	AT32700/10	A Band	
L5	Coil assembly	AT32700/13	B & M2 Bands	
L5	Coil assembly	AT32701/11	E Band	
L5	Coil assembly	AT32701/14	M1 Band	
L6,7	Coil assembly	AT32122/01		
L8	Coil assembly	FT06440		
L9	Coil assembly	AT32172/09	A,B & M2 Bands	
L9	Coil assembly	AT32172/10	E & M1 Bands	
L10-14	Coil assembly	AT32172/09	A & B Bands	Six channel
L10-14	Coil assembly	AT32172/10	E Band	
L15	Coil assembly	AT32078/05	A,B & M2 Bands	
L15	Coil assembly	AT32080/03	E & M1 Bands	
L16	Coil assembly	AT32078/04	A,B & M2 Bands	
L16	Coil assembly	AT32080/04	E & M1 Bands	
L17	Coil assembly	AT32078/03	A,B & M2 Bands	
L17	Coil assembly	AT32080/05	E & M1 Bands	
L18-42			Not Used	
L43-46	Coil assembly	AT31233/04	A band	
L43-46	Coil assembly	AT31233	B, M1 & M2 Bands	
L43-46	Coil assembly	AT31224/01	E Band	

For Service Manuals Contact
MAURITRON TECHNICAL SERVICES
8 Cherry Tree Rd, Chinnor
Oxon OX9 4QY
Tel:- 01844-351694 Fax:- 01844-352554
Email:- enquiries@mauritron.co.uk

ELECTRICAL ITEMS

FB1	Bead		
FL1	Crystal filter 12,5 kHz	FC36151	
FL1	Crystal filter 25 kHz	FC03293	12,5 kHz channel spacing
FL2	Ceramic filter 455 kHz/12,5 kHz	FC99004	20 & 25 kHz channel spacing
FL2	Ceramic filter 455 kHz/20 kHz	FC99022	12,5 kHz channel spacing
FL2	Ceramic filter 455 kHz/25 kHz	FC99021	20 kHz channel spacing
SA	Switch, channel	FC99020	25 kHz channel spacing
		FS07199	Six channel

Cct. Ref	Description	Part No.	Remarks
ELECTRICAL ITEMS (Cont'd)			
XL13	Crystal,11,155 MHz	FC03174/04	
XL13	Crystal, 10,425 MHz	FC03174/03	Alternative to FC03174/04
	Header, str, male, 8 way	FC00837/08	
	Lead assembly	AT36746	Rx – Control board
MISCELLANEOUS			
	Can	BJ34060	L1,2
	Can	FT03520	L3–5
	Can	BT15879/01	L6,7
	Can	FT03521	L15–17
	Clip	QA04097	
	Compression ring	QA04133	1/SA } Six channel
	Knob, channel	BT37491	
	Label, channel	BT38029	Six channel
	Label, ident	BT38030/03	
	Mixer screen	BT26326	
	Thumbwheel white	PL62113	RV4

PCB ASSEMBLY VHF Tx [3]
AT28751/–

/01 25W, duplex, single channel	A Band
/02 25W, simplex, single channel	A Band
/03 25W, duplex, six channel	A Band
/04 25W, simplex, six channel	A Band
/05 25W, duplex, single channel	B and M2 Bands
/06 25W, simplex, single channel	B and M2 Bands
/07 25W, duplex, six channel	B Band
/08 25W, simplex, six channel	B Band
/09 25W, duplex, single channel	E Band
/10 25W, simplex, single channel	E Band
/11 25W, duplex, six channel	E Band
/12 25W, simplex, six channel	E Band
/13 25W, duplex, single channel	M1 Band
/14 25W, simplex, single channel	M1 Band

SUB ASSEMBLIES

Heatsink & feedthrough assembly	AT14231/02	See headed list
Screen Assembly	AT14708	See headed list
Screen Assembly	AT14718	See headed list
Cover Asembly	AT14727	See headed list

SEMICONDUCTORS

TR1-16			Not Used
TR17-19	Transistor BC547	FV05889	
TR20	Transistor BC327	FV05975	
TR21,22	Transistor BC547	FV05889	
TR23	Transistor BC547B	FV05891	
TR24–26	Transistor MPS918–18	FV05893	
TR27,28	Transistor BF244B	FV05827	
TR29–31	Transistor MPS918–18	FV05893	
TR32	Transistor	FV05830	

Cct. Ref	Description	Part No.	Remarks
SEMICONDUCTORS (Cont'd)			
TR33	Transistor TIP32	FV08940	Part of AT14718
TR34	Transistor BC327	FV05975	A, E & M1 Bands
TR34	Transistor BC557B	FV05977	B & M2 Bands
TR35	Transistor TP2314 'BeO'	FV41807	
TR36	Transistor TP2330 'BeO'	FV41841	A,B & M2 Bands
TR36	Transistor 2N5591	FV08925	E Band
TR36	Transistor RF2123A 'BeO'	FV40830	M1 Band
D1–7			Not Used
D8–10	Diode 1N4148	FV05808	D8 – Simplex
D11–12	Diode 1N4001	FV05840	

RESISTORS

R1–58						Not Used
R59	27k	±5%	0,25W	c.film	PM01453	
R60–85						Not Used
R86	1k2	±5%	0,25W	c.film	PM01437	
R87	100k	±5%	0,25W	c.film	PM01460	
R88	10k	±5%	0,25W	c.film	PM01448	
R89	680	±5%	0,25W	c.film	PM01434	
R90	120	±5%	0,25W	c.film	PM01425	
R91	100k	±5%	0,25W	c.film	PM01460	
R92	100	±5%	0,25W	c.film	PM01424	
R93	10k	±5%	0,25W	c.film	PM01448	
R94	470	±5%	0,25W	c.film	PM01432	
R95 SOT	33	±5%	0,25W	c.film	PM01418	See SELECT-ON-TEST PROCEDURES, Section 4
	39	±5%	0,25W	c.film	PM01419	
	47	±5%	0,25W	c.film	PM01420	
	56	±5%	0,25W	c.film	PM01421	
	68	±5%	0,25W	c.film	PM01422	
	82	±5%	0,25W	c.film	PM01423	
	100	±5%	0,25W	c.film	PM01424	
	120	±5%	0,25W	c.film	PM01425	
	150	±5%	0,25W	c.film	PM01426	
	180	±5%	0,25W	c.film	PM01427	
	220	±5%	0,25W	c.film	PM01428	
	270	±5%	0,25W	c.film	PM01429	
R96	12k	±5%	0,25W	c.film	PM01449	
R97	2k2	±5%	0,25W	c.film	PM01440	
R98	270	±5%	0,25W	c.film	PM01429	
R99	100	±5%	0,25W	c.film	PM01424	
R100	150	±5%	0,25W	c.film	PM01426	
R101	6k8	±5%	0,25W	c.film	PM01446	
R102	8k2	±5%	0,25W	c.film	PM01447	
R103,104	4k7	±5%	0,25W	c.film	PM01444	
R105	10k	±5%	0,25W	c.film	PM01448	
R106	8k2	±5%	0,25W	c.film	PM01447	
R107	18k	±5%	0,25W	c.film	PM01451	
R108	3k3	±5%	0,25W	c.film	PM01442	
R109	820	±5%	0,25W	c.film	PM01435	
R110	1k5	±5%	0,25W	c.film	PM01438	
R111	5k6	±5%	0,25W	c.film	PM01445	
R112	18k	±5%	0,25W	c.film	PM01451	
R113	2k2	±5%	0,25W	c.film	PM01440	
R114	47	±5%	0,25W	c.film	PM01420	
R115–120	2k2	±20%	posistor		PL23133	
R121–126	2k2	±5%	0,25W	c.film	PM01440	R122–126 Six channel
R127	100	±5%	0,25W	c.film	PM01424	
R128,129	100k	±5%	0,25W	c.film	PM01460	
R130	470	±5%	0,25W	c.film	PM01432	
R131	4k7	±5%	0,25W	c.film	PM01444	
R132	100k	±5%	0,25W	c.film	PM01460	
R133	18k	±5%	0,25W	c.film	PM01451	
R134	1k2	±5%	0,25W	c.film	PM01437	
R135	100	±5%	0,25W	c.film	PM01424	
R136	3k3	±5%	0,25W	c.film	PM01442	
R137	5k6	±5%	0,25W	c.film	PM01445	
R138	2k7	±5%	0,25W	c.film	PM01441	

Cct. Ref	Description				Part No.	Remarks
RESISTORS (Cont'd)						
R139	3k9	±5%	0,25W	c.film	PM01443	
R140	8k2	±5%	0,25W	c.film	PM01447	
R141	2k2	±5%	0,25W	c.film	PM01440	
R142	150	±5%	0,25W	c.film	PM01426	
R143	1k5	±5%	0,25W	c.film	PM01438	
R144	470	±5%	0,25W	c.film	PM01432	
R145	10k	±5%	0,25W	c.film	PM01448	
R146	680	±5%	0,25W	c.film	PM01434	
R147	270	±5%	0,25W	c.film	PM01429	
R148	680	±5%	0,25W	c.film	PM01434	
R149	10k	±5%	0,25W	c.film	PM01448	
R150	820	±5%	0,25W	c.film	PM01435	
R151,152	100	±5%	0,25W	c.film	PM01424	
R153	10k	±5%	0,25W	c.film	PM01448	
R154	820	±5%	0,25W	c.film	PM01435	
R155	47	±5%	0,25W	c.film	PM01420	
R156	47	±5%	0,25W	c.film	PM01420	A & E Bands
R156	100	±5%	0,25W	c.film	PM01424	B, M1 & M2 Bands
R157	3k3	±5%	0,25W	c.film	PM01442	
R158	1k2	±5%	0,25W	c.film	PM01437	
R159	56	±5%	0,25W	c.film	PM01421	
R160	470	±5%	0,25W	c.film	PM01432	A,B & M2 Bands
R160	100	±5%	0,25W	c.film	PM01424	E & M1 Bands
R161	820	±5%	0,25W	c.film	PM01435	A Band
R161	39	±5%	0,25W	c.film	PM01419	B & M2 Bands
R161	270	±5%	0,25W	c.film	PM01429	E Band
R161	82	±5%	0,25W	c.film	PM01423	M1 Band
R162	820	±5%	0,25W	c.film	PM01435	
R163	1	±5%	0,25W	c.film	PM01400	
R164	10	±5%	0,25W	c.film	PM01412	A,B, E & M2 Bands
R164	22	±5%	0,25W	c.film	PM01416	M1 Band
R165,166	820	±5%	0,25W	c.film	PM01435	
R167	2k2	±5%	0,25W	c.film	PM01440	A, B, M1 & M2 Bands
R167	1k	±5%	0,25W	c.film	PM01436	E Band
R168	0Ω03	±20%	2,5W		PL41528	A,B,E & M2 Bands
R168	0Ω1	±10%	2,5W	WW	PL40113	M1 Band
R168	0Ω33	±10%	2,5W	WW	PL50610	A & E Bands (German Market)
R169	39	±5%	0,25W	c.film	PM01419	A Band
R169	22	±5%	0,25W	c.film	PM01416	B & M2 Bands
R169	68	±5%	0,25W	c.film	PM01422	E Band
R169	10	±5%	0,25W	c.film	PM01412	M1 Band
R170	10	±5%	0,25W	c.film	PM01412	A,B,M1 & M2 Bands
R170	6Ω8	±5%	0,25W	c.film	PM01410	E Band
R171	3Ω3	±5%	0,25W	c.film	PM01406	
R172	470	±5%	0,25W	c.film	PM01432	A,B,M1 & M2 Bands
R172	330	±5%	0,25W	c.film	PM01430	E Band
R173	100k	±5%	0,25W	c.film	PM01460	
R174–182						Not Used
R183	820	±5%	0,25W	c.film	PM01435	
R184,185						Not Used
R186	68	±5%	0,25W	c.film	PM01422	
R187	12k	±5%	0,125W	c.film	PL99781	A,B,M1 & M2 Bands
R187	3k3	±5%	0,125W	c.film	PL99775	E Band
R188	180	±5%	0,25W	c.film	PM01427	E Band
R189	100	±5%	0,125W	c.film	PL99757	B Band
CAPACITORS						
C1–79						Not Used
C80	470p	±2%	63V	cer plate	PN99810	Simplex
C81	33	±20%	35V	elec	PS99429	
C82	1n	±10%	63V	cer plate	PN99811	
C83	2μ2	±20%	100V	elec	PS99456	
C84	1n	±10%	63V	cer plate	PN99811	
C85	2μ2	±20%	100V	elec	PS99456	
C86	4n7	±10%	63V	cer plate	PN99813	
C87	1n	±10%	63V	cer plate	PN99811	
C88	33	±20%	35V	elec	PS99429	

Cct. Ref	Description				Part No.	Remarks
CAPACITORS (Cont'd)						
C89	4n7	±10%	63V	cer plate	PN99813	
C90	2μ2	±20%	35V	tant	PS99503	
C91	100	±20%	3V	tant	PS99510	
C92	2n2	±10%	63V	cer plate	PN99812	
C93	2μ2	±20%	100V	elec	PS99456	
C94	2n2	±10%	63V	cer plate	PN99812	
C95	2μ2	±20%	100V	elec	PS99456	
C96	100n	±10%	63V	poly	PQ99511	
C97	2n2	±10%	63V	cer plate	PN99812	
C98	2n2	±2,5%	63V	poly	PQ99617	
C99	10n	±2,5%	63V	poly	PQ99621	
C100	4n7	±10%	63V	cer plate	PN99813	
C101	2n2	±2,5%	63V	poly	PQ99617	
C102	10n	±2,5%	63V	poly	PQ99621	
C103,104	2n2	±10%	63V	cer plate	PN99812	
C105	33	±20%	35V	elec	PS99429	
C106	2n2	±10%	63V	cer plate	PN99812	
C107	33	±20%	35V	elec	PS99429	
C108	4n7	±10%	63V	cer plate	PN99813	
C109	0μ1	±20%	50V	elec	PS99863	
C110	1n	±10%	63V	cer plate	PN99811	A,B,M1 & M2 Bands
C110	82p	±2%	63V	cer plate	PN99770	E Band
C111	270p	±2%	63V	cer plate	PN99776	A Band
C111	330p	±2%	63V	cer plate	PN99777	B,M1 & M2 Bands
C111	470p	±2%	63V	cer plate	PN99810	E Band
C112	100p	±2%	63V	cer plate	PN99771	A Band
C112	120p	±2%	63V	cer plate	PN99772	B & M2 Bands
C112	150p	±2%	63V	cer plate	PN99773	E Band
C112	100p	±2%	63V	cer plate	PN99805	M1 Band
C113	150p	±2%	63V	cer plate	PN99773	A Band
C113	180p	±2%	63V	cer plate	PN99795	B & M2 Bands
C113	100p	±2%	63V	cer plate	PN99771	E Band
C113	470p	±2%	63V	cer plate	PN99810	M1 Band
C114	1n	±10%	63V	cer plate	PN99811	A,B,E & M2 Bands
C114	82p	±2%	63V	cer plate	PN99804	M1 Band
C115	4n7	±10%	63V	cer plate	PN99813	
C116	56p	±2%	63V	cer plate	PN99768	A Band
C116	68p	±2%	63V	cer plate	PN99803	B & M2 Bands
C116	100p	±2%	63V	cer plate	PN99771	E Band
C116	120p	±2%	63V	cer plate	PN99806	M1 Band
C117	27p	±2%	63V	cer plate	PN99764	A Band
C117	33p	±2%	63V	cer plate	PN99799	B & M2 Bands
C117	120p	±2%	63V	cer plate	PN99772	E Band
C117	56p	±2%	63V	cer plate	PN99802	M1 Band
C118	100n	±10%	63V	poly	PQ99511	
C119	7-35p		160V	Variable	PV05118	
C120	4n7	±10%	63V	cer plate	PN99813	
C121	10p	±Op25	63V	cer plate	PN09345	A Band
C121	12p	±Op25	63V	cer plate	PN99760	B & M2 Bands
C121	180p	±2%	63V	cer plate	PN99774	E Band
C121	33p	±2%	63V	cer plate	PN99799	M1 Band
C122	10p	±Op25	63V	cer plate	PN09345	A Band
C122	12p	±Op25	63V	cer plate	PN99760	B & M2 Bands
C122	33p	±2%	63V	cer plate	PN99799	E & M1 Bands
C123	1n	±10%	63V	cer plate	PN99811	
C124	33	±20%	35V	elec	PS99429	
C125	100n	±10%	63V	poly	PQ99511	
C126	1n	±10%	63V	cer plate	PN99811	
C127	1n	±10%	63V	cer plate	PN99811	A,B,E & M2 Bands
C127	4n7	±10%	63V	cer plate	PN99813	M1 Band
C128	100p	±2%	63V	cer plate	PN99771	A Band
C128	120p	±2%	63V	cer plate	PN99806	B,M1 & M2 Bands
C128	47p	±2%	63V	cer plate	PN99767	E Band
C129	100n	±10%	63V	poly	PQ99511	
C130	1p8	±Op25	63V	cer plate	PN00458	A & E Bands
C130	2p2	±Op25	63V	cer plate	PN01338	B & M2 Bands
C130	2p7	±Op25	63V	cer plate	PN01342	M1 Band
C131	1n	±10%	63V	cer plate	PN99811	

Cct. Ref	Description				Part No.	Remarks
CAPACITORS (Cont'd)						
C132	100p	±2%	63V	cer plate	PN99771	A Band
C132	120p	±2%	63V	cer plate	PN99806	B, M1 & M2 Bands
C132	39p	±2%	63V	cer plate	PN99766	E Band
C133	47p	±2%	63V	cer plate	PN99767	A Band
C133	56p	±2%	63V	cer plate	PN99802	B & M2 Bands
C133	82p	±2%	63V	cer plate	PN99770	E Band
C133	68p	±2%	63V	cer plate	PN99803	M1 Band
C134	1n	±10%	63V	cer plate	PN99811	
C135	1p8	±Op25	63V	cer plate	PN00458	A & E Bands
C135	2p2	±Op25	63V	cer plate	PN01338	B, M1 & M2 Bands
C136	1n	±10%	63V	cer plate	PN99811	A, B, E & M2 Bands
C136	4n7	±10%	63V	cer plate	PN99813	M1 Band
C137	82p	±2%	63V	cer plate	PN99770	A Band
C137	120p	±2%	63V	cer plate	PN99806	B & M2 Bands
C137	10p	±Op25	63V	cer plate	PN09345	E Band
C137	82p	±2%	63V	cer plate	PN99804	M1 Band
C138	100p	±2%	63V	cer plate	PN99771	A Band
C138	120p	±2%	63V	cer plate	PN99806	B & M2 Bands
C138	47p	±2%	63V	cer plate	PN99767	E Band
C138	150p	±2%	63V	cer plate	PN99773	M1 Band
C139	1n	±10%	63V	cer plate	PN99811	
C140	27p	±2%	63V	cer plate	PN99764	A Band
C140	39p	±2%	63V	cer plate	PN99787	B & M2 Band
C140	47p	±2%	63V	cer plate	PN99767	E Band
C140	47p	±2%	63V	cer plate	PN99801	M1 Band
C141	1p	±Op25	63V	cer plate	PN00355	A Band
C141	1p2	±10%	500V	cer comp	PN00114	B & M2 Bands
C141	1p8	±Op25	63V	cer plate	PN00458	E Band
C141	2p2	±Op25	63V	cer plate	PN01338	M1 Band
C142	1n	±10%	63V	cer plate	PN99811	A, B, E & M2 Bands
C142	4n7	±10%	63V	cer plate	PN99813	M1 Band
C143	33p	±2%	63V	cer plate	PN99765	A Band
C143	47p	±2%	63V	cer plate	PN99788	B & M2 Bands
C143	68p	±2%	63V	cer plate	PN99769	E Band
C143	56p	±2%	63V	cer plate	PN99802	M1 Band
C144	100p	±2%	63V	cer plate	PN99771	A & E Bands
C144	120p	±2%	63V	cer plate	PN99806	B & M2 Bands
C144	150p	±2%	63V	cer plate	PN99773	M1 Band
C145	1n	±10%	63V	cer plate	PN99811	
C146	15p	±Op25	63V	cer plate	PN99761	A Band
C146	22p	±2%	63V	cer plate	PN99797	B, M1 & M2 Bands
C146	27p	±2%	63V	cer plate	PN99798	E Band
C147	Op56	±10%	500V	cer comp	PN00123	A Band
C147	Op68	±10%	500V	cer comp	PN00124	B & M2 Bands
C147	Op82	±10%	500V	cer comp	PN00120	E Band
C147	1p8	±Op25	63V	cer plate	PN00458	M1 Band
C148	1n	±10%	63V	cer plate	PN99811	A,B & M2 Bands
C148	4n7	±10%	63V	cer plate	PN99813	E & M1 Bands
C149	4n7	±10%	63V	cer plate	PN99813	
C150	1n	±10%	63V	cer plate	PN99811	
C151	22p	±2%	63V	cer plate	PN99763	A & E Bands
C151	27p	±2%	63V	cer plate	PN99798	B & M2 Bands
C151	33p	±2%	63V	cer plate	PN99799	M1 Band
C152	56p	±2%	63V	cer plate	PN99768	A Band
C152	68p	±2%	63V	cer plate	PN99803	B, M1 & M2 Bands
C152	100p	±2%	63V	cer plate	PN99771	E Band
C153	1n	±10%	63V	cer plate	PN99811	A,B & M2 Bands
C153	4n7	±10%	63V	cer plate	PN99813	E & M1 Bands
C154	1n	±10%	63V	cer plate	PN99811	
C155	27p	±2%	63V	cer plate	PN99764	A & E Bands
C155	47p	±2%	63V	cer plate	PN99801	B & M2 Bands
C155	27p	±2%	63V	cer plate	PN99798	M1 Band
C156	39p	±2%	63V	cer plate	PN99800	M2 Band
C156	22p	±2%	63V	cer plate	PN99797	E Band
C156	56p	±2%	63V	cer plate	PN99802	M1 Band
C157	47p	±2%	63V	cer plate	PN99767	E Band

Cct. Ref	Description				Part No.	Remarks
CAPACITORS (Cont'd)						
C158	30-140p		250V	variable	PV99022	A, B & M2 Bands
C158	10-80p		250V	variable	PV99021	E Band
C158	60-180p		250V	variable	PV99023	M1 Band
C159,160	2μ2	±20%	100V	elec	PS99456	
C161	100n	±10%	63V	poly	PQ99511	
C162	68p	±2%	63V	cer plate	PN99803	B Band
C162	56p	±2%	63V	cer plate	PN99802	M2 Band
C162	27p	±2%	63V	cer plate	PN99764	E Band
C163	30-140p		250V	variable	PV99022	A, B & M2 Bands
C163	10-80p		250V	variable	PV99021	E Band
C163	60-180p		250V	variable	PV99023	M1 Band
C164,165	4n7	±10%	63V	cer plate	PN99813	
C166	1n	±10%	63V	cer plate	PN99811	
C167	10p	±Op25	63V	cer plate	PN09345	
C167	100p	±2%	63V	cer plate	PN99771	A Band
C167	22p	±2%	63V	cer plate	PN99797	E Band
C168-170	4n7	±10%	63V	cer plate	PN99813	M1 Band
C171	82p	±2%	63V	cer plate	PN99770	
C172	60-180p		250V	variable	PV99023	E Band
C172	120-135p		350V	variable	PV99024	A, B & M2 bands
C173	1n	±10%	63V	cer plate	PN99811	E & M1 bands
C174	470	±10%	25V	elec	PS45810	
C175	100n	±10%	63V	poly	PQ99511	
C176	33p	±2%	63V	cer plate	PN99765	A, B & M2 Bands
C176	47p	±2%	63V	cer plate	PN99767	E Band
C177	10-80p		250V	variable	PV99021	A, B & M2 Bands
C177	30-140p		250V	variable	PV99022	E & M1 Bands
C178	100p	±2%	63V	cer plate	PN99771	A Band
C178	82p	±2%	63V	cer plate	PN99770	B & M2 Bands
C178	120p	±2%	63V	cer plate	PN99806	M1 Band
C179	100p	±2%	63V	cer plate	PN99771	A Band
C179	82p	±2%	63V	cer plate	PN99770	B & M2 Bands
C179	120p	±2%	63V	cer plate	PN99806	M1 Band
C180	100p	±2%	63V	cer plate	PN99580	A Band
C180	120p	±2%	63V	cer plate	PN99772	E Band
C181	100p	±2%	63V	cer plate	PN99580	A Band
C181	120p	±2%	63V	cer plate	PN99772	E Band
C182	68p	±2%	63V	cer plate	PN99769	E Band
C183	60-180p		250V	variable	PV99023	A,B & M2 Bands
C183	120-135p		350V	variable	PV99024	E & M1 Bands
C184	10p	±Op25	63V	cer plate	PN09345	B & M2 Bands
C184	33p	±2%	63V	cer plate	PN99765	E Band
C185	10-80p		250V	variable	PV99021	A, B M1 & M2 Bands
C185	60-180p		250V	variable	PV99023	E Band
C186	4n7	±10%	63V	cer plate	PN99813	
C187	2p2	±Op25	63V	cer plate	PN01338	A Band
C187	2p7	±Op25	63V	cer plate	PN01342	B, M1 & M2 Bands
C187	6p8	±Op25	63V	cer plate	PN05345	E Band
C188	3p3	±Op25	63V	cer plate	PN02339	A Band
C188	3p9	±Op25	63V	cer plate	PN02411	B & M2 Bands
C188	5p6	±Op25	63V	cer plate	PN04379	E Band
C188	8p2	±Op25	63V	cer plate	PN07337	M1 Band
C189	8p2	±Op25	63V	cer plate	PN07337	A Band
C189	10p	±Op25	63V	cer plate	PN09345	B, M1 & M2 Bands
C189	22p	±Op25	63V	cer plate	PN99797	E Band
C190	12p	±Op25	63V	cer plate	PN99760	A Band
C190	15p	±Op25	63V	cer plate	PN99761	B, M1 & M2 Bands
C190	27p	±Op25	63V	cer plate	PN99798	E Band
C191	3p9	±Op25	63V	cer plate	PN02411	A Band
C191	4p7	±Op25	63V	cer plate	PN03354	B & M2 Bands
C191	10p	±Op25	63V	cer plate	PN09345	E & M1 Bands
C192	15p	±Op25	63V	cer plate	PN99761	A Band
C192	18p	±Op25	63V	cer plate	PN99762	B & M2 Bands
C192	39p	±2%	63V	cer plate	PN99766	E Band
C192	27p	±2%	63V	cer plate	PN99798	M1 Band
C193						Not used
C194	18p	±Op25	63V	cer plate	PN99762	A Band

For Service Manuals Contact
MAURITRON TECHNICAL SERVICES
8 Cherry Tree Rd, Chinnor
Oxon OX9 4QY
Tel:- 01844-351694 Fax:- 01844-352554
Email:- enquiries@mauritron.co.uk

Cct. Ref	Description				Part No.	Remarks
CAPACITORS (Cont'd)						
C194	22p	±2%	63V	cer plate	PN99797	B, M1 & M2 Bands
C194	39p	±2%	63V	cer plate	PN99766	E Band
C195	15p	±Op25	63V	cer plate	PN99761	
C196	470	±10%	25V	elec	PS45810	
C197,198						Not Used
C199	470	±10%	25V	elec	PS45810	
C200						Not Used
C201	33p	±2%	63V	cer plate	PN99765	A Band
C201	39p	±2%	63V	cer plate	PN99766	B & M2 Bands
C201	39p	±2%	63V	cer plate	PN99800	M1 Band
C202	33	±20%	35V	elec	PS99429	
C203	18p	±2%	63V	cer plate	PN99571	M1 Band

INDUCTORS			
L1–17			Not Used
L18	Coil	AT32171/23	A,B & M2 Bands
L18	Coil assembly	AT32188/01	E Band
L18	Coil assembly	AT32188/02	M1 Band
L19–23	Coil	AT32171/23	A & B Bands, six channel
L19–23	Coil assembly	AT32188/01	E Band, six channel
L24	Choke, 15μH ±10%	FT99004	A,B & M2 Bands
L24	Choke, 33μH ±10%	FT05618	E Band
L24	Choke, 22μH ±10%	FT99011	M1 Band
L25	Choke, 22μH ±10%	FT99011	A, B, M1 & M2 Bands
L25	Choke, 47μH ±10%	FT99005	E Band
L26,27	Coil assembly	AT32071/04	A,B & M2 Bands
L26,27	Coil assembly	AT32103/03	E Band
L26,27	Coil assembly	AT32190/01	M1 Band
L28	Coil assembly	AT32068/05	A, B & M2 Bands
L28	Coil assembly	AT32071/05	E Band
L28	Coil assembly	AT32190/02	M1 Band
L29	Coil assembly	AT32068/05	A, B & M2 Bands
L29	Coil assembly	AT32103/03	E Band
L29	Coil assembly	AT32190/02	M1 Band
L30	Coil assembly	AT32060/02	A, B, M1 & M2 Bands
L30	Coil assembly	AT32068/02	E Band
L31	Coil assembly	AT32060/01	A, B, M1 & M2 Bands
L31	Coil assembly	AT32068/03	E Band
L32	Coil assembly	AT32052/04	A Band
L32	Coil assembly	AT32052/03	B & M2 Bands
L32	Coil assembly	AT32060/03	E Band
L32	Coil assembly	AT32067/12	M1 Band
L33	Choke, 10μH ±10%	FT05708	
L34	Coil assembly	AT32052/02	A, B & M2 Bands
L34	Coil assembly	AT32060/04	E Band
L34	Coil assembly	AT32067/11	M1 Band
L35	Coil assembly	AT32052/03	A, B & M2 Bands
L35	Coil assembly	AT32060/06	E Band
L35	Coil assembly	AT32067/10	M1 Band
L36			Not used
L37	Coil assembly	AT31185	A & M1 Bands
L37	Coil assembly	AT31027	B & M2 Bands
L38	Coil assembly	AT31188	A, B & M2 Bands
L38	Coil assembly	AT31221/04	E Band
L38	Coil assembly	AT31188/03	M1 Band
L39	Coil assembly	AT31185	A, B, M1 & M2 Bands
L39	Choke assembly	AT31975/01	E Band
L40	Coil assembly	AT31188	A, B & M2 Bands
L40	Coil assembly	AT31221/05	E Band
L40	Coil assembly	AT31188/02	M1 Band
L41	Coil assembly	AT31187	A & M1 Bands
L41	Coil assembly	AT31187/04	B & M2 Bands
L41	Coil assembly	AT31187/01	E Band
L42	Coil assembly	AT31186	A, B & M2 Bands

Cct. Ref	Description	Part No.	Remarks
INDUCTORS (Cont'd)			
L42	Coil assembly	AT31187	E Band
L42	Coil assembly	AT31168/01	M1 Band
L43–46	Coil assembly	AT31233/04	A Band
L43–46	Coil assembly	AT31233	B, M1 & M2 Bands
L43–46	Coil assembly	AT31224/01	E Band
L47	Choke, 470μH ±10%	FT99007	
ELECTRICAL ITEMS			
FB2,3–6 9,10	Ferrox bead	FC36151	2/FB2; FB 3–5 B, M1 & M2 Bands; FB3,9 E Band; 1/FB6; FB 10 E Band simplex
FB7	Choke assembly	AT31975/01	
RLA	Changeover relay, 9V, 115Ω ±10%	FR21703	Simplex
SA	Switch, channel	FS07199	Six channel
–	Header, str, male, 8 way	FC00837/08	
–	Lead assembly	AT36800	Rx/Tx PCB, simplex
–	Lead assembly, Tx antenna	AT36770/03	
MISCELLANEOUS			
	Can	FT03521	L26–32, 34,35
	Clip	BT16666	1/Tx antenna lead, A,B & M2 Bands
	Clip	QA04097	
	Compression ring	QA04133	1/SA
	Eyelet	QA09725	
	Heatshunt bracket	BT11351	1/TR35
	Heatsink	BT37586	1/TR32
	Heatsink	QA05849	1/TR34
	Heatsink adaptor	QA05776	1/TR35
	Insulating bead	FJ00007	
	Knob, channel	BT37491	Six channel
	Label, channel	BT38029	Six channel
	Label, ident	BT38030/04	
	PA screen	BT26336	
	Shim	BT29967	
	Support	BT26628	
FIXINGS			
	Scr, sdriv, pan, st, M2,5 x 5mm	QJ11944/B	1/Soldertag-heatsink
	Scr, pozi, pan, st, M3 x 6mm	QJ11901/X	2/Support
	Scr, sdriv, pan, st, M3 x 10mm	QJ11903/K1	2/Heatsink support
	Scr, sdriv, pan, st, M3 x 20mm	QJ11906/K1	2/Heatshunt-heatsink
	Nut, hex, st, M3	QA11605/X	2/Heatshunt-heatsink
	Insulating bead	FJ00007	1/L24, L25, L33, L47
			1/R168

For Service Manuals Contact
MAURITRON TECHNICAL SERVICES
8 Cherry Tree Rd, Chinnor
Oxon OX9 4QY
Tel:- 01844-351694 Fax:- 01844-352554
Email:- enquiries@mauritron.co.uk

PCB ASSEMBLY UHF Rx [2]
AT28728/–

/01	Single channel, 25 kHz channel spacing	U0 Band
/02	Single channel, 20 kHz channel spacing	U0 Band
/04	Single channel, 25 kHz channel spacing	T1 Band
/05	Single channel, 20 kHz channel spacing	T1 Band
/07	Six channel, 25 kHz channel spacing	U0 Band
/08	Six channel, 20 kHz channel spacing	U0 Band
/10	Six channel, 25 kHz channel spacing	T1 Band
/11	Six channel, 20 kHz channel spacing	T1 Band
/13	Single channel 12,5 kHz channel spacing	T1 Band
/14	Single channel 12,5 kHz channel spacing	U0 Band

Cct. Ref	Description	Part No.	Remarks
SUB ASSEMBLIES			
	PCB Assembly Crystal Oven	AT28910/01	12,5 kHz channel spacing — See headed list
	Screen Assembly	AT14715	See headed list
	Cover Assembly	AT14727	20 & 25 kHz channel spacing — See headed list
SEMICONDUCTORS & ICS			
IC1	IC IF amp & discriminator	FU07680	
IC2			Not Used
IC3	IC741	FU99073	
TR1	**Transistor BFQ 51**	**FV05600**	
TR2	Transistor V850B	FV39006	
TR3,4	Transistor MPS918–18	FV05893	
TR5,6	Transistor BC547	FV05889	
TR7	Transistor MPS–A13	FV08935	
TR8–10			Not Used
TR11–13	Transistor MPS918–18	FV05893	
TR14	Transistor BFR99	FV07515	
TR15	Transistor BC547B	FV05891	
TR16	Transistor MPS–A13	FV08935	
TR17–19	Transistor BC547B	FV05891	
TR20–40			Not Used
TR41,42	Transistor BC547	FV05889	
TR43	Transistor TIP32	FV08940	Part of AT14715
D1,2	Diode 1N4148	FV05808	
D3,4			Not Used
D5,6	Diode 1N4148	FV05808	
D7–12			Not Used
D13	Zener Diode 2F8,2	FV08030	
D14	Diode 1N4001	FV05840	

RESISTORS

R1	560	±5%	0,125W	c.film	PL99766	
R2	1k5	±5%	0,25W	c.film	PM01438	
R3	390	±5%	0,25W	c.film	PM01431	
R4	100	±5%	0,25W	c.film	PM01424	
R5	120k	±5%	0,25W	c.film	PM01461	
R6	100	±5%	0,25W	c.film	PM01424	
R7	100k	±5%	0,25W	c.film	PM01460	
R8	1k	±5%	0,25W	c.film	PM01436	12,5 kHz channel spacing
R8	1k5	±5%	0,25W	c.film	PM01438	20 & 25 kHz channel spacing
R9	100k	±5%	0,25W	c.film	PM01460	
R10	1k	±5%	0,25W	c.film	PM01436	12,5 kHz channel spacing
R10	1k5	±5%	0,25W	c.film	PM01438	20 & 25 kHz channel spacing
R11	100k	±5%	0,25W	c.film	PM01460	
R12	3k9	±5%	0,25W	c.film	PM01443	
R13	100	±5%	0,25W	c.film	PM01424	
R14	8k2	±5%	0,25W	c.film	PM01447	
R15	3k9	±5%	0,25W	c.film	PM01443	
R16	680	±5%	0,25W	c.film	PM01434	
R17	470	±5%	0,25W	c.film	PM01432	
R18,19	1k8	±5%	0,25W	c.film	PM01439	

Cct. Ref	Description				Part No.	Remarks
RESISTORS (Cont'd)						
R20	47k	±5%	0,25W	c.film	PM01456	
R21	10k	±5%	0,25W	c.film	PM01448	20 & 25 kHz channel spacing
R21	22k	±5%	0,25W	c.film	PM01452	12,5 kHz channel spacing
R22	1k2	±5%	0,25W	c.film	PM01437	
R23	100k	±5%	0,25W	c.film	PM01460	
R24	560k	±5%	0,25W	c.film	PM01469	
R25	120k	±5%	0,25W	c.film	PM01461	
R26						Not Used
R27	1k2	±5%	0,25W	c.film	PM01437	
R28	47k	±5%	0,25W	c.film	PM01456	
R29,30	680k	±5%	0,25W	c.film	PM01470	
R31	1k2	±5%	0,25W	c.film	PM01437	
R32–34						Not Used
R34A	10k	±5%	0,25W	c.film	PM01448	
R35–40						Not Used
R41	6k	±20%	Posistor		PL23133	20 & 25 kHz channel spacing
R42–46	6k	±20%	Posistor		PL23133	Six channel, 20 & 25 kHz channel spacing
R47	680	±5%	0,25W	c.film	PM01434	
R48–52	680	±5%	0,25W	c.film	PM01434	Six channel
R53	56k	±5%	0,25W	c.film	PM01457	
R54	39k	±5%	0,25W	c.film	PM01455	
R55	680	±5%	0,25W	c.film	PM01434	
R56	100	±5%	0,25W	c.film	PM01424	
R57	5k6	±5%	0,25W	c.film	PM01445	
R58	820	±5%	0,25W	c.film	PM01435	
R59,60	100	±5%	0,25W	c.film	PM01424	
R61	15k	±5%	0,25W	c.film	PM01450	
R62	5k6	±5%	0,25W	c.film	PM01445	
R63	220	±5%	0,25W	c.film	PM01428	
R64	100	±5%	0,25W	c.film	PM01424	
R65	1	±10%	0,25W	c.film	PM01400	
R66	56	±5%	0,25W	c.film	PM01421	
R67	5k6	±5%	0,25W	c.film	PM01445	
R68	15k	±5%	0,25W	c.film	PM01450	
R69	220	±5%	0,25W	c.film	PM01428	
R70	150	±5%	0,25W	c.film	PM01426	
R71	47k	±5%	0,25W	c.film	PM01456	
R72	2k2	±5%	0,25W	c.film	PM01440	
R73,74	10k	±5%	0,25W	c.film	PM01448	
R75	1k8	±5%	0,25W	c.film	PM01439	
R76	560	±5%	0,25W	c.film	PM01433	
R77	15k	±5%	0,25W	c.film	PM01450	
R78	8k2	±5%	0,25W	c.film	PM01447	
R79	4k7	±5%	0,25W	c.film	PM01444	
R80	2k2	±5%	0,25W	c.film	PM01440	20 kHz channel spacing
R80	4k7	±5%	0,25W	c.film	PM01444	12,5 & 25 kHz channel spacing
R81	1k2	±5%	0,25W	c.film	PM01437	
R82	100k	±5%	0,25W	c.film	PM01460	
R83						Not Used
R83A	1	±10%	0,25W	c.film	PM01400	
R84	470	±5%	0,25W	c.film	PM01432	
R85	4k7	±5%	0,25W	c.film	PM01444	
R86	22	±5%	0,25W	c.film	PM01416	
R87	1k	±1%	0,25W	m.film	PL99086	
R88	4k7	±5%	0,25W	c.film	PM01444	
R89	1k	±5%	0,25W	c.film	PM01436	
R90	1k	±1%	0,25W	m.film	PL99086	
R91,92	100	±5%	0,25W	c.film	PM01424	
R93	1k	±5%	0,25W	c.film	PM01436	
R94	33k	±5%	0,25W	c.film	PM01454	
R95	2k7	±5%	0,25W	c.film	PM01441	
R96	4k7	±5%	0,25W	c.film	PM01444	
R97	1k21	±1%	0,25W	c.film	PL99087	
R98	825	±1%	0,25W	c.film	PL99085	
R99	6k8	±5%	0,25W	c.film	PM01446	
R100	2k61	±1%	0,25W	c.film	PL99091	
R101–151						Not Used

Cct. Ref	Description				Part No.	Remarks
RESISTORS (Cont'd)						
R152	470	±5%	0,25W	c.film	PM01432	
R153–185						Not Used
R186 SOT	100	±5%	0,25W	c.film	PM01424	
	120	±5%	0,25W	c.film	PM01425	
	150	±5%	0,25W	c.film	PM01426	
	180	±5%	0,25W	c.film	PM01427	
	220	±5%	0,25W	c.film	PM01428	See SELECT-ON-TEST
	270	±5%	0,25W	c.film	PM01429	PROCEDURES, Section 4
	330	±5%	0,25W	c.film	PM01430	
	390	±5%	0,25W	c.film	PM01431	
	470	±5%	0,25W	c.film	PM01432	
R187	150	±5%	0,25W	c.film	PM01426	
R188	10k	±5%	0,25W	c.film	PM01448	
R189	470	±5%	0,25W	c.film	PM01432	
R190	150	±5%	0,25W	c.film	PM01426	
R191	470	±5%	0,25W	c.film	PM01432	
R192	2k2	±5%	0,25W	c.film	PM01440	
RV1	10k	±20%	Lin, Pot,	skel	PL03647	
RV2						Not Used
RV3	10k	±20%	Lin, Pot,	skel	PL62112	
CAPACITORS						
C1	1n	±10%	63V	cer plate	PN99811	
C1A	1n	±10%	63V	cer plate	PN99600	
C2	5p6	±Op5	200V	cer tub	PN04142	
C3,4	1n	±10%	63V	cer plate	PN99811	
C5	4n7	±10%	63V	cer plate	PN99813	
C6	100n	±10%	63V	poly	PQ99511	
C7	39p	±2%	63V	cer plate	PN99766	
C8	1n	±10%	63V	cer plate	PN99811	
C9	4n7	±10%	63V	cer plate	PN99813	
C10	100n	±10%	63V	poly	PQ99511	
C11	10p	±2%	63V	cer plate	PN09345	
C12,13	4n7	±10%	63V	cer plate	PN99813	
C14	1n	±10%	63V	cer plate	PN99811	
C15	4n7	±10%	63V	cer plate	PN99813	
C16,17	100n	±10%	63V	poly	PQ99511	
C18	10p	±2%	63V	cer plate	PN09345	
C19	10	±20%	16V	tant	PS99505	
C20	180p	±2%	63V	cer plate	PN99774	
C21–23	4n7	±10%	63V	cer plate	PN99813	
C24	100n	±10%	63V	poly	PQ99511	
C25	1	±20%	100V	elec	PS99455	
C26,27	4n7	±10%	63V	cer plate	PN99813	
C28	2μ2	±20%	100V	elec	PS99456	
C28A	1n	±10%	63V	cer plate	PN99811	
C29–37						Not Used
C38	4n7	±10%	63V	cer plate	PN99813	
C38A	1n	±10%	63V	cer plate	PN99811	
C39	47p	±2%	63V	cer plate	PN99801	
C40	33p	±2%	63V	cer plate	PN99799	
C41	27p	±2%	63V	cer plate	PN99764	
C42	Op56	±10%	500V	cer comp	PN00123	
C43	4n7	±10%	63V	cer plate	PN99813	
C44	22p	±2%	63V	cer plate	PN99763	
C45	33p	±2%	63V	cer plate	PN99765	
C46,47	1n	±10%	63V	cer plate	PN99811	
C48	3p3	±Op25	63V	cer plate	PN02339	
C49	3p9	±Op25	63V	cer plate	PN02411	
C50,51	1n	±10%	63V	cer plate	PN99811	
C52	4n7	±10%	63V	cer plate	PN99813	
C53	1n	±10%	63V	cer plate	PN99811	
C54	3p3	±Op25	63V	cer plate	PN02339	
C55,55A	1n	±10%	63V	cer plate	PN99811	
C56	4n7	±10%	63V	cer plate	PN99813	
C57	1n	±10%	63V	cer plate	PN99811	
C58–60	4n7	±10%	63V	cer plate	PN99813	
C61	56p	±2%	63V	cer plate	PN99768	

Cct. Ref	Description				Part No.	Remarks
CAPACITORS (Cont'd)						
C62	100p	±2%	63V	cer plate	PN99771	
C63	1	±20%	35V	tant	PS99502	
C64	68p	±2%	63V	cer plate	PN99769	
C65	2p7	±Op25	63V	cer plate	PN01342	
C66,67	4n7	±10%	63V	cer plate	PN99813	
C68,69	2μ2	±20%	100V	elec	PS99456	
C70	100n	±10%	63V	poly	PQ99511	
C71	4n7	±10%	63V	cer plate	PN99813	
C71A	33p	±2%	63V	cer plate	PN99574	
C72	1	±20%	35V	tant	PS99502	
C73	4n7	±10%	63V	cer plate	PN99813	
C74	2μ2	±20%	100V	elec	PS99456	
C75	1	±20%	35V	tant	PS99502	
C76–86						
C87	4μ7	±20%	25V	tant	PS99504	Not Used
C88–195						
C196–199	5p6	±Op5	200V	cer tub	PN04142	Not Used
C200	470	−10% ±50%	16V	tant	PS45808	
C201	100n	±10%	63V	poly	PQ99511	
C202,203	4n7	±10%	63V	cer plate	PN99813	
C204	470	−10% ±50%	16V	tant	PS45808	
C205–207						
C208	1n	±10%	63V	cer plate	PN99600	Not Used
C209						
C210	33p	±2%	63V	cer plate	PN99574	Not Used
C211	1n	±10%	63V	cer plate	PN99600	
C212–217						
C218	33p	±2%	63V	cer plate	PN99765	Not Used
C219						
C220	10p	±2%	63V	cer plate	PN99702	Not Used

INDUCTORS

L1	Coil assembly	AT30082/01	T1 Band
L1	Coil assembly	AT30082	U0Band
L2	Coil assembly	AT30082/03	T1 Band
L2	Coil assembly	AT30082/02	U0 Band
L3	Coil assembly	AT32156/14	T1 Band
L3	Coil assembly	AT32156/03	U0 Band
L4	Coil assembly	AT32156/13	T1 Band
L4	Coil assembly	AT32156/10	U0 Band
L5	Coil assembly	AT32156/14	T1 Band
L5	Coil assembly	AT32156/03	U0 Band
L6	Choke assembly	AT32323	
L7	Coil assembly	AT32171/17	
L8	Coil	FT06440	
L9	Coil assembly	AT32172/07	T1 & U0 Bands 12,5 kHz channel spacing
L9	Coil assembly	AT32172/09	T1 & U0 Bands, 20 & 25 kHz channel spacing
L10–14	Coil assembly	AT32172/09	Six channel
L15	Coil assembly	AT32078/05	
L16	Coil assembly	AT32060/01	
L17	Coil assembly	AT32052/02	
L18,19	Coil assembly	AT32156/04	
L20	Coil assembly	AT32156/03	T1 Band
L20	Coil assembly	AT32156/11	U0 Band
L21	Coil assembly	AT32156/01	T1 Band
L21	Coil assembly	AT32156/04	U0 band
L22–56			Not Used
L57	Coil assembly	AT30083/01	

Cct. Ref	Description	Part No.	Remarks
ELECTRICAL ITEMS			
FL1	Crystal filter 12,5 kHz	FC03547	12,5 kHz channel spacing
FL1	Crystal filter 20 kHz	FC99040	20 kHz channel spacing
FL1	Crystal filter 25 kHz	FC03528	25 kHz channel spacing
FL2	Ceramic filter 455 kHz/25 kHz	FC99020	12,5 & 25 kHz channel spacing
FL2	Ceramic filter 455 kHz/20 kHz	FC99021	20 kHz channel spacing
SA	Switch, channel	FS07199	Six channel
WLK6	Cable assembly	AT36613	
XL13	Crystal 20,945 MHz	FC03174/05	
XL13	Crystal 21,855 MHz	FC03174/06	Alternative to FC03174/05
–	Lead assembly	AT36746	Rx – control board
–	Header, str, male, 8-way	FC00837/08	
MISCELLANEOUS			
	Antenna filter screen	BT26311/01	1/Antenna filter
	Can	AT14804/01	For L18,19
	Can	AT14804/02	For L20,21
	Can	AT14805/02	For L3, 5
	Can	FT03521	For L7,16,17
	Can	FT03520	1/2nd Osc; 1/RF front end
	Cavity screw	BT08621	
	Clip	QA04097	2/Mixer screen
	Compression ring	QA04133	1/SA
	Insulator Rx mult.screen	BT37687	
	Knob, channel	BT37491	Six channel
	Label, channel	BT38029	Six channel
	Label, ident	BT38030/02	
	Machined cavity	BT36892	
	Mixer screen	BT15812	
	Oscillator/multiplier can	BT15805	
	Pad	BT24685	
	Pillar-hexagon	BT04132	12,5 kHz channel spacing
	Rx Multiplier screen (TR14)	BT26316	
	Rx Oscillator can	FC00126	
	Stand off insulator	FJ00183	1/RF Input
	Ty-rap	QA04424	1/Xtal oven wires–PCB /13,14
	Thumbwheel, white	**PL62113**	
FIXINGS			
	Scr, sdriv, pan, st, M2,5 x 6mm	QJ11945/B	6/Cavity
	Scr, nylon, pan, M2,5 x 6mm	QJ10700	2/Cavity
	Scr, pozi, pan, st, M3 x 6mm	QJ11901/X	12,5 kHz channel spacing
	Scr, nylon, ch, 6BA x ¼in	QJ05001	2/Cavity

PCB ASSEMBLY UHF TX [3]
AT28727/–

/01	25W, duplex, single channel	U0 Band
/02	6W, duplex, single channel	U0 Band
/05	25W, duplex, six channel	U0 Band
/06	6W, duplex, six channel	U0 Band
/09	25W, simplex, single channel	U0 Band
/10	6W, simplex, single channel	U0 Band
/13	25W, simplex, six channel	U0 Band
/14	6W, simplex, six channel	U0 Band
/21	25W, duplex, single channel	U0 Band
/22	25W, simplex, single channel	U0 Band
/23	6W, duplex, single channel	U0 Band
/24	6W, simplex, single channel	U0 Band
/03	25W, duplex, single channel	T1 Band
/04	6W, duplex, single channel	T1 Band
/07	25W, duplex, six channel	T1 Band
/08	6W, duplex, six channel	T1 Band
/11	25W, simplex, single channel	T1 Band
/12	6W, simplex, single channel	T1 Band
/15	25W, simplex, six channel	T1 Band
/16	6W, simplex, six channel	T1 Band
/17	25W, duplex, single channel	T1 Band
/18	25W, simplex, single channel	T1 Band
/19	6W, duplex, single channel	T1 Band
/20	6W, simplex, single channel	T1 Band

SUB ASSEMBLIES

25W PA assembly	AT28848	Module [4]	See headed list
Heatsink & Feedthrough Assembly	AT14231/01		See headed list
PCB Assembly Crystal Oven	AT28910/01	/17–/24	See headed list
Screen Assembly	AT14714		See headed list
Cover Assembly	AT14727	/01–/16	See headed list

Cct. Ref	Description	Part No.	Remarks
SEMICONDUCTORS			
TR1–19	Transistor BC547	FV05889	Not used
TR20–25	Transistor MPS918–18	FV05893	
TR26,27	Transistor BC547B	FV05891	
TR28	Transistor MPS918–18	FV05893	
TR29	Transistor BF245B	FV05900	
TR30,31	Transistor MPS918–18	FV05893	
TR32,33	Transistor BFR91	FV05544	
TR34,35	Transistor 576 BLY 'BeO'	FV05857	
TR36	Transistor TIP 115	FV05791	Part of AT14714
TR37	Transistor MRF 630 'BeO'	FV37862	
TR38	Transistor 2N5447	FV05879	
TR39	Transistor SD1136 'BeO'	FV40833	
TR40			
D1–8	Diode 1N4148	FV05808	Not Used
D9,10	Diode 1N4001	FV05840	
D11,12			
D13–15	Diode 1N4001	FV05840	Not Used
D16			

RESISTORS

R1–60						
R61	33k	±5%	0,25W	c.film	PM01454	Not Used
R62–100						
R101	1k2	±5%	0,25W	c.film	PM01437	Not Used
R102	100k	±5%	0,25W	c.film	PM01460	
R103	10k	±5%	0,25W	c.film	PM01448	
R104	68	±5%	0,25W	c.film	PM01422	
R105	470	±5%	0,25W	c.film	PM01432	
R106	120	±5%	0,25W	c.film	PM01425	
R107	100k	±5%	0,25W	c.film	PM01460	
R108	100	±5%	0,25W	c.film	PM01424	
R109	10k	±5%	0,25W	c.film	PM01448	
R110	220	±5%	0,25W	c.film	PM01428	
R111 SOT	47	±5%	0,25W	c.film	PM01420	See SELECT-ON-TEST PROCEDURES, Section 4
	56	±5%	0,25W	c.film	PM01421	
	68	±5%	0,25W	c.film	PM01422	
	82	±5%	0,25W	c.film	PM01423	
	100	±5%	0,25W	c.film	PM01424	
	120	±5%	0,25W	c.film	PM01425	
	150	±5%	0,25W	c.film	PM01426	
	180	±5%	0,25W	c.film	PM01427	
	220	±5%	0,25W	c.film	PM01428	
R112	10k	±5%	0,25W	c.film	PM01448	
R113	2k2	±5%	0,25W	c.film	PM01440	
R114	390	±5%	0,25W	c.film	PM01431	
R115	100	±5%	0,25W	c.film	PM01424	
R116	150	±5%	0,25W	c.film	PM01426	
R117	8k2	±5%	0,25W	c.film	PM01447	
R118	12k	±5%	0,25W	c.film	PM01449	
R119	5k6	±5%	0,25W	c.film	PM01445	
R120	10k	±5%	0,25W	c.film	PM01448	
R121	6k8	±5%	0,25W	c.film	PM01446	
R122	18k	±5%	0,25W	c.film	PM01451	
R123,124	12k	±5%	0,25W	c.film	PM01449	
R125	2k7	±5%	0,25W	c.film	PM01441	
R126	15k	±5%	0,25W	c.film	PM01450	
R127	8k2	±5%	0,25W	c.film	PM01447	
R128	2k2	±5%	0,25W	c.film	PM01440	
R129	100	±5%	0,25W	c.film	PM01424	
R130	100	±5%	0,25W	c.film	PM01424	/01–/16
R130	180	±5%	0,25W	c.film	PM01427	/17–/24

For Service Manuals Contact
MAURITRON TECHNICAL SERVICES
8 Cherry Tree Rd, Chinnor
Oxon OX9 4QY
Tel:- 01844-351694 Fax:- 01844-352554
Email:- enquiries@mauritron.co.uk

Cct. Ref	Description				Part No.	Remarks
RESISTORS (Cont'd)						
R131	6k	±20%	Posistor		PL23133	/01–16
R132–136	6k	±20%	Posistor		PL23133	/05–08, /13–16
R137	100	±5%	0,25W	c.film	PM01424	
R137A	100	±5%	0,25W	c.film	PM01424	Primary option 14 only
R138,139	100k	±5%	0,25W	c.film	PM01460	
R140	470	±5%	0,25W	c.film	PM01432	
R141	1k	±5%	0,25W	c.film	PM01436	
R142	100k	±5%	0,25W	c.film	PM01460	
R143	18k	±5%	0,25W	c.film	PM01451	
R144	1k2	±5%	0,25W	c.film	PM01437	U Band
R144	1k5				PM01438	T1 band
R145	100	±5%	0,25W	c.film	PM01424	
R146	5k6	±5%	0,25W	c.film	PM01445	
R147	3k3	±5%	0,25W	c.film	PM01442	
R148	10	±5%	0,25W	c.film	PM01412	
R149						Not Used
R150	10	±5%	0,25W	c.film	PM01412	
R151	2k2	±5%	0,25W	c.film	PM01440	
R152	150	±5%	0,25W	c.film	PM01426	
R153	8k2	±5%	0,25W	c.film	PM01447	
R154	2k2	±5%	0,25W	c.film	PM01440	
R155	1k2	±5%	0,25W	c.film	PM01437	
R156	470	±5%	0,25W	c.film	PM01432	
R157	10k	±5%	0,25W	c.film	PM01448	
R158	100	±5%	0,25W	c.film	PM01424	
R159	680	±5%	0,25W	c.film	PM01434	
R160	100	±5%	0,25W	c.film	PM01424	
R161	680	±5%	0,25W	c.film	PM01434	
R162	5k6	±5%	0,25W	c.film	PM01445	
R163	820	±5%	0,25W	c.film	PM01435	
R164,165	100	±5%	0,25W	c.film	PM01424	
R166	5k6	±5%	0,25W	c.film	PM01445	
R167	820	±5%	0,25W	c.film	PM01435	
R168,169	100	±5%	0,25W	c.film	PM01424	
R170	10k	±5%	0,25W	c.film	PM01448	
R171	470	±5%	0,25W	c.film	PM01432	
R172,173	100	±5%	0,25W	c.film	PM01424	
R174	1k2	±5%	0,25W	c.film	PM01437	
R175	820	±5%	0,25W	c.film	PM01435	
R176	68	±5%	0,25W	c.film	PM01422	
R177	47	±5%	0,25W	c.film	PM01420	
R178,179	10	±5%	0,25W	c.film	PM01412	
R180	12k	±5%	0,25W	c.film	PM01449	
R181	470	±5%	0,25W	c.film	PM01432	
R182	10	±5%	0,25W	c.film	PM01412	
R183						Not Used
R184	0Ω1	±10%	2,5W	WW	PL40113	
R185–195						Not Used
R196	680	±5%	0,166W	c.film	PL99767	
R197–201	680	±5%	0,166W	c.film	PL99767	Six channel
R202, 203	10k	±5%	0,166W	c.film	PL99780	
R204	4k7	±5%	0,166W	c.film	PL99777	
R205	3k3	±5%	0,166W	c.film	PL99775	
R206	100	±5%	0,166W	c.film	PL99757	
R207	100	±5%	0,25W	c.film	PM01424	
R208,209	3R3	±5%	0,25W	c.film	PM01406	
RV1–3						Not Used
RV4	4k7	±20%	Lin, Pot,	skel	PL03370	
RV5	470	±20%	Lin, Pot,	skel	PL06730	
RV6	100	±20%	Lin, Pot,	skel	PL99009	

Cct. Ref	Description				Part No.	Remarks
CAPACITORS						
C1–76						Not Used
C77	33	±20%	35V	elec	PS99429	
C78	1n	±10%	63V	cer plate	PN99811	
C79	2μ2	±20%	100V	elec	PS99456	
C80	1n	±10%	63V	cer plate	PN99811	
C81	33	±20%	35V	elec	PS99429	
C82	2μ2	±20%	100V	elec	PS99456	
C83	4n7	±10%	63V	cer plate	PN99813	
C84	33	±20%	35V	elec	PS99429	
C85	1n	±10%	63V	cer plate	PN99811	
C86	4n7	±10%	63V	cer plate	PN99813	
C87	4μ7	±20%	25V	tant	PS99504	
C88	100	±20%	3V	tant	PS99510	
C89	2n2	±10%	63V	cer plate	PN99812	
C90	2μ2	±20%	100V	elec	PS99456	
C91	2n2	±10%	63V	cer plate	PN99812	
C92	2μ2	±20%	100V	elec	PS99456	
C93	2n2	±10%	63V	cer plate	PN99812	
C94	47n	±10%	63V	poly	PQ99514	
C95	2n2	±2,5%	100v	poly	PQ99617	
C96	10n	±2,5%	100V	poly	PQ99621	
C97	4n7	±10%	63V	cer plate	PN99813	
C98	2n2	±2,5%	100V	poly	PQ99617	
C99	10n	±2,5%	100v	poly	PQ99621	
C100,101	2n2	±10%	63V	cer plate	PN99812	
C102	33	±20%	35V	elec	PS99429	
C103	2n2	±10%	63V	cer plate	PN99812	
C104	33	±20%	35V	elec	PS99429	
C105–107	1n	±10%	63V	cer plate	PN99811	
C108	100n	±20%	50V	poly	PQ99556	
C109	270p	±2%	63V	cer plate	PN99776	
C109A	220p	±2%	63V	cer plate	PN99584	
C110	270p	±2%	63V	cer plate	PN99776	
C111	1n	±10%	63V	cer plate	PN99811	
C112	150p	±2%	63V	cer plate	PN99773	
C113	1n	±10%	63V	cer plate	PN99811	
C114	4n7	±10%	63V	cer plate	PN99813	
C115	47p	±2%	63V	cer plate	PN99767	
C116	220p	±2%	63V	cer plate	PN99775	
C117	0μ1	±20%	35V	tant	PS99201	
C118	1n	±10%	63V	cer plate	PN99811	
C119	68p	±2%	63V	cer plate	PN99769	
C120	4n7	±10%	63V	cer plate	PN99813	
C121	10p	±2%	63V	cer plate	PN09345	U Band
C121	22p	±2%	63V	cer plate	PN99763	T1 Band
C122	10p	±2%	63V	cer plate	PN09345	
C123	33	±20%	35V	elec	PS99429	
C124	100n	±10%	63V	poly	PQ99511	
C125–127	1n	±10%	63V	cer plate	PN99811	
C128	100n	±10%	63V	poly	PQ99511	
C129	100p	±2%	63V	cer plate	PN99771	
C130	2p2	±Op25	63V	cer plate	PN01338	
C131–133	1n	±10%	63V	cer plate	PN99811	
C134	47p	±2%	63V	cer plate	PN99767	
C135	100p	±2%	63V	cer plate	PN99771	
C136	1n	±10%	63V	cer plate	PN99811	
C137	1p8	±Op25	63V	cer plate	PN00458	
C138,139	1n	±10%	63V	cer plate	PN99811	
C140	82p	±2%	63V	cer plate	PN99770	except /07, /08, /15, /16
C140	100p	±2%	63V	cer plate	PN99771	/07, /08, /15, /16
C141	82p	±2%	63V	cer plate	PN99770	except /07, /08, /15, /16
C141	100p	±2%	63V	cer plate	PN99771	/07, /08, /15, /16
C142	10p	±2%	63V	cer plate	PN09345	
C143	1n	±10%	63V	cer plate	PN99811	
C144	Op68	±10%	500V	cer comp	PN00124	
C145,146	1n	±10%	63V	cer plate	PN99811	
C147,148	22p	±2%	63V	cer plate	PN99763	
C149	6p8	±Op25	63V	cer plate	PN05345	
C150	Op33	±10%	500V	cer comp	PN00115	

Cct. Ref	Description				Part No.	Remarks
CAPACITORS (Cont'd)						
C151–153	1n	±10%	63V	cer plate	PN99811	
C154,155	15p	±2%	63V	cer plate	PN99761	
C156–161	1n	±10%	63V	cer plate	PN99811	
C162	4n7	±10%	63V	cer plate	PN99813	
C163	1p8	±Op25	63V	cer plate	PN00458	
C164	4n7	±10%	63V	cer plate	PN99813	
C165	2–18p		250V	variable	PV07670	
C166	1n	±10%	63V	cer plate	PN99811	
C167	8p2	±Op25	63V	cer plate	PN07337	
C168	1n	±10%	63V	cer plate	PN99811	
C169	100n	±10%	63V	poly	PQ99511	
C170	2–18p		250V	variable	PV07670	
C171,172	4n7	±10%	63V	cer plate	PN99813	
C173	5p6	±Op25	63V	cer plate	PN04379	
C174	100n	±10%	63V	poly	PQ99511	
C175–177	1n	±10%	63V	cer plate	PN99811	
C178	10p	±2%	63V	cer plate	PN09345	
C179	100n	±10%	63V	poly	PQ99511	
C180	1n	±10%	63V	cer plate	PN99811	
C181	100n	±10%	63V	poly	PQ99511	
C182	4n7	±10%	63V	cer plate	PN99813	
C183,184	2–18p		250V	variable	PV07670	
C185	4n7	±10%	63V	cer plate	PN99813	
C186,187	1n	±10%	63V	cer plate	PN99811	
C188	10p	±2%	63V	cer plate	PN09345	
C189	1n	±10%	63V	cer plate	PN99811	
C190	10p	±2%	63V	cer plate	PN09345	
C191,192	100n	±10%	63V	poly	PQ99511	
C193,194	2–18p		250V	variable	PV07670	
C195						Not Used
C196–199	5p6	±Op25	63V	cer plate	PN04379	
C200	470	−10% ±50%	16V	elec	PS45808	
C201–203						Not Used
C204	470	−10% ±50%	16V	elec	PS45808	
C205–208						Not Used
C209	3p3	±Op25	63V	cer plate	PN99860	
C210,211						Not Used
C212	4n7	±10%	100V	cer plate	PN99604	
C213,214	33p	±2%	63V	cer plate	PN99799	
C215						Not Used
C216, 217	33p	±2%	63V	cer plate	PN99799	
C218, 219						Not Used
C220	4p7	±Op25	50V	cer plate	PN99862	
C225,226	33p	±2%	63V	cer plate	PN99799	T1 Band

INDUCTORS

L1–21			Not Used
L22	Coil assembly	AT32171/21	T1 Band; AT32171/29 on U Band
L23–27	Coil assembly	AT32171/21	Six channel
L28	Choke 470μH ±10%	FT99007	
L29	Choke 22μH ±10%	FT99011	
L30,31	Coil assembly	AT32068/05	
L32–35	Coil assembly	AT32060/01	
L36,37	Coil assembly	AT32052/02	
L38	Choke assembly	AT32323	
L39	Coil assembly	AT32156/07	T1 Band
L39	Coil assembly	AT32156/03	U0 Band
L40	Coil assembly	AT32156/07	T1 Band
L40	Coil assembly	AT32156/03	U0 Band
L41	Choke assembly	AT32323	
L42	Coil assembly	AT32156/07	T1 Band
L42	Coil assembly	AT32156/03	U0 Band
L43	Coil assembly	AT32156/07	T1 Band
L43	Coil assembly	AT32156/03	U0 Band
L44	Coil assembly	AT30080	
L45	Choke assembly	AT31961/06	

Cct. Ref	Description	Part No.	Remarks
INDUCTORS (Cont'd)			
L46–48	Coil assembly	AT30080	
L49	Choke assembly	AT31961/05	
L50,51	Coil assembly	AT30080	
L52	Loop	AT32932	
L53	Choke assembly	AT31961/05	
L54	Coil assembly	AT30080	
L55,56	Loop	AT32932	
L57	Coil assembly	AT30083	
WLK 3	Loop	AT32904	
ELECTRICAL ITEMS			
FB1,2	Bead	FC36151	
FB10,11	Ferrox Cube Core	4313 320 80001	
	Header, str, male, 8 way	FC00837/08	
	Lead assembly	AT36770/06	Tx antenna (Duplex)
	Lead assembly	AT36770/07	Common antenna
	Lead assembly	AT36779	Rx PCB – relay (Simplex)
	Lead assembly	AT36780	Tx PCB–relay
RLA	Relay	FR02090	Simplex
SA	Switch, channel	FS07199	Six channel
MISCELLANEOUS			
	Antenna filter screen (L57)	BT26311/01	
	Bead, insulating	FJ00007	1/L28,L29
	Can	AT14804/02	For L39, 40, 42, 43
	Can	FT03521	For L30–37
	Compression ring	QA04133	1/SA
	Heatsink	QA05786	1/TR36
	Heatsink	QA05842	1/TR38
	Heatsink bracket	BT11350	1/TR36
	Heatsink support	BT26628	
	Insulator, PA Screen 1	BT37684	
	Insulator, PA Screen 2	BT37685	
	Insulator, Relay screen	BT37686	
	Knob, channel	BT37491	Six channel
	Label, channel	BT38029	Six channel
	Label, ident	BT38030/01	
	Pad	BT24685	1/C200,204
	PA Screen (TR36)	BT26314	Underside
	PA Screen (TR40)	BT26315/01	
	PA Screen (TR36)	BT26318	
	PA Screen (TR38)	BT26319	Upperside
	Pillar, hexagon	BT04132	
	Pillar, hexagon	BT04465	
	Relay screen (RLA)	BT26313	Underside
	Standoff insulator	FJ00813	1/RF Output
	Tag, solder	FT00094	1/RLA
	Transipad	QA05821	1/TR36
	Ty-rap	QA04424	1/Xtal oven wires–PCB /17–24
	25W PA Screen	BT26312	1/Module [4]
FIXINGS			
	Scr, pozi, pan, st, M2,5 x 5mm	QJ11944/B	1/Antenna filter screen–heatsink
	Scr, sdriv, pan, st, M2,5 x 10mm	QJ11947/B	1/Ty-rap; 2/Trans-heatsink
	Scr, pozi, pan, st, M3 x 6mm	QJ11901/X	1/heatsink; 1/PCB
	Scr, sdriv, pan, st, M3 x 10mm	QJ11903/K1	2/Heatsink support
	Scr, pozi, pan, st, M3 x 16mm	QJ11905/K1	1/Solder Tag – heatsink
	Scr, sdriv, pan, st, M3 x 25mm	QJ11907/X	2/RLA-heatsink
	Nut, st, M3	QA11605/X	1/Soldertag
	Washer, st, M3 x 7mm x 0,5mm	QA15005/X	1/RLA

Cct. Ref.	Description				Part No.	Remarks

25W PA ASSEMBLY [4]
AT28848

SEMICONDUCTORS

TR300	Transistor BLU 30/12				9337 434 00112

RESISTORS

R300	10	±5%	0,125W	c.film	PL99750

CAPACITORS

C300,301	4n7	±10%	63V	cer plate	PN99813
C302,303	18p	±2%	63V	cer plate	PN99762
C304	1n	±10%	63V	cer plate	PN99811
C305	100n	±10%	63V	poly	PQ99511
C306	2–15p	1500V		variable	PV07270
C307	2p2	±Op25	63V	cer plate	PN01338
C308,309	10p	±2%	63V	cer plate	PN09345

INDUCTORS

L300	Choke assembly	AT31961/07
L301	Coil assembly	AT30080
L302	Loop	AT32933
L303	Loop	AT32936

MISCELLANEOUS

Solder tag 6BA	FT00049
Wire link	AT30323

HEATSINK AND FEEDTHROUGH ASSEMBLY
AT14231/01
AT14231/02

MISCELLANEOUS

Bracket assembly	AT14232	See headed list
Cover bracket	BT11346	2/Bracket assembly
Ferrite bead	FC34450	
Ferrox cube core	4313 320 80001	
Grommet $^{3}/_{8}$ in	FG02268	1/Bracket assembly
Lead assembly	AT36767	1/Feedthrough assembly–Regulator PCB
Lead assembly	AT36768	1/Feedthrough assembly–Control PCB
Lead assembly	AT36769/01	/01 1/Feedthrough assembly–Tx PCB
Pillar, hexagon	BT04413	2/Bracket assembly–heatsink
Pin $^{1}/_{16}$ in x $^{5}/_{8}$ in	QA08337	
Pin, black,zn	QA08333/K	1/Heatsink
Transistor heatsink	BT37594	/01
Transistor heatsink	BT37597	/02
Transmitter heatsink	BJ37118	
Ty-rap	QA04427	

FIXINGS

Scr, pozi, pan, st, M2,5 x 8mm	QJ11946/B	/02
Scr, pozi, pan, st, M3 x 6mm	QJ11901/X	2/Bracket assembly–pillars
Scr, sdriv, pan, st, M3 x 16mm	QJ11905/Z	2/Bracket assembly–heatsink
Scr, sdriv, pan, st, M3 x 20mm	QJ11906/K1	3/Device–heatsink
Scr, pozi, tap, st, No4 x 8 mm	QJ08241/X	4/Cover bracket–heatsink
Scr, pozi, tap, st, No4 x 9,5 mm	QJ08268/X	2/Ty-rap
Nut, hex, st, M3	QA11605/X	3/Device–heatsink

Cct. Ref	Description	Part No.	Remarks

BRACKET ASSEMBLY
AT14232

	Feedthrough bracket	BT11352	
[3]C1–8	Capacitor, 1n+100%–0% feedthrough, 50V	PN26628	

PCB ASSEMBLY CRYSTAL OVEN
AT28910/01

SEMICONDUCTORS

TR1	Transistor BD436				FV05886	
TR2	Transistor BC327				FV05975	

RESISTORS

R1	100	±5%	0,25W	c.film	PM01424	
R2	1Ω2	±5%	0,25W	c.film	PM01401	
TH1	Thermistor				PL23137	

CAPACITORS

C1	4n7	±20%	50V	cer	PN99919	

MISCELLANEOUS

	Insulating cover	BT15897	
	Crystal oven	BT45138	
	Retainer	BT48021	
	Mica Insulator	BT36934/01	1/TR1

FIXINGS

	Scr, sdriv, csk, st, M2,5 x 5mm	QJ11944/B	
	Scr, sdriv, csk, st, M2,5 x 6mm	QJ11945/B	

SCREEN ASSEMBLY
AT14708

	Screen, Regulator	BT26304	
	Screen	BT26308	

SCREEN ASSEMBLY
AT14709

	Transistor TIP32	FV08940	TR39
	Screen, Regulator	BT26304	
	Screen	BT26308	
	Bush, insulating	QA99024	
	Washer, insulating	QA99025	
	Scr, pozi, pan, st, M3 x 8mm	QJ11902/X	
	Nut, hex, st, M3	QA11605/X	

SCREEN ASSEMBLY
AT14714

	Transistor TIP115	FV05791	TR37
	Screen, 3, PA	BT26320	Upperside
	Bush, Insulating	QA05855	1/PA screen
	Bush, insulating	QA99024	
	Washer, insulating	QA99025	
	Scr, pozi, pan, st, M3 x 8mm	QJ11902/X	
	Nut, hex, st, M3	QA11605/X	

Cct. Ref	Description	Part No.	Remarks
	SCREEN ASSEMBLY AT14715		
	Transistor TIP32	FV08940	TR43
	Screen, 3, PA	BT26320	
	Bush, insulating	QA99024	
	Washer, insulating	QA99025	
	Scr, pozi, pan, st, M3 x 8mm	QJ11902/X	
	Nut, hex, st, M3	QA11605/X	
	HEATSINK ASSEMBLY AT14718		
	Transistor TIP32	FV08940	TR33
	Heatsink	BT37525	
	Scr, pan, pozi, st, M3 x 8mm	QJ11902/X	
	Nut, hex, st, M3	QA11605/X	
	Bush, insulating	QA99024	1/TR33
	Washer, insulating	QA99025	1/TR33
	COVER ASSEMBLY AT14727		
	Cover, Oscillator, Printed	BJ30740	
	Screen, Oscillator	BT26305/01	
	Washer	BT29237	

CAPACITOR/COIL ASSEMBLY AT14728/–

AT14728/04 – A Band
AT14728/05 – B and M2 Bands
AT14728/06 – E Band
AT14728/07 – M1 Band

Coil Assembly					AT32126/06	L1,2	A, B & M2 Bands
Coil Assembly					AT32126/07	L1,2	E Band
Coil Assembly					AT32126/08	L1,2	M1 Band
Capacitor	Op56	±10%	500V	cer comp	PN00123	C2	A Band
Capacitor	12p	±2%	63V	cer plate	PN99569	C1,3	A Band
Capacitor	Op68	±10%	500V	cer comp	PN00124	C2	B & M2 Bands
Capacitor	15p	±2%	63V	cer plate	PN99570	C1,3	B & M2 Bands
Capacitor	2p7	±5%	500V	cer comp	PN01121	C2	E Band
Capacitor	33p	±2%	63V	cer plate	PN99574	C1,3	E Band
Capacitor	Op82	±10%	500V	cer comp	PN00120	C2	M1 Band
Capacitor	18p	±2%	63V	cer plate	PN99571	C1,3	M1 Band

LOUDSPEAKER ASSEMBLY AT10877/02

MISCELLANEOUS

Bracket	BT11251/01
Cloth, rear cover	BT27318
Cover	BT15372/01
Identification sleeve	FS22192/06
Insulating sleeve	FS22184/04
Label	BT18990
Loudspeaker	FS11548
Loudspeaker cloth	BT27347
Loudspeaker grille	BT35823
Mounting strap	BT27020
Pin, tin plated	FT10537
2-way housing	FT10535

For Service Manuals Contact
MAURITRON TECHNICAL SERVICES
8 Cherry Tree Rd, Chinnor
Oxon OX9 4QY
Tel:- 01844-351694 Fax:- 01844-352554
Email:- enquiries@mauritron.co.uk

FIXINGS

Scr, sdriv, hex, st, No10 x 20mm	QJ06645/X	2/Strap-cover
Scr, sdriv, pan, st, 4/20 x 5/16 in	QJ08268/X	
Nut, captive	QA00114	2/grille
Washer, st, 2BA	QA13002/X	2/Strap-cover
Washer, spring, 2BA	QA13464/B	2/Strap-cover

INDUCTOR INFORMATION

Coil	Core Part No.
AT31975/01	FC02103
AT32052/02 – /04	FC36120/01
AT32060/01 & /02	FC36120/01
AT32060/03 & /04 & /06	FC36150/01
AT32067/10 – /12	FC36120/01
AT32068/02 & /03	FC36150/01
AT32068/05	FC99105/01
AT32071/04	FC99105/01
AT32071/05	FC36150/01
AT32078/03 – /05	FC36120/01
AT32080/03 – /05	FC02977/01
AT32103/03	FC36150/01
AT32122/01	FC36120/01
AT32126/06 – /08	FC36163/01
AT32171/23	FC36150/01
AT32171/29	FC02977/01
AT32172/09 & /10	FC36150/01
AT32188/01 & /02	FC36150/01
AT32190/01 & /02	FC99105/01
AT32700/01, /09 – 13	FC02899/01
AT32701/09 – /14	FC02899/01

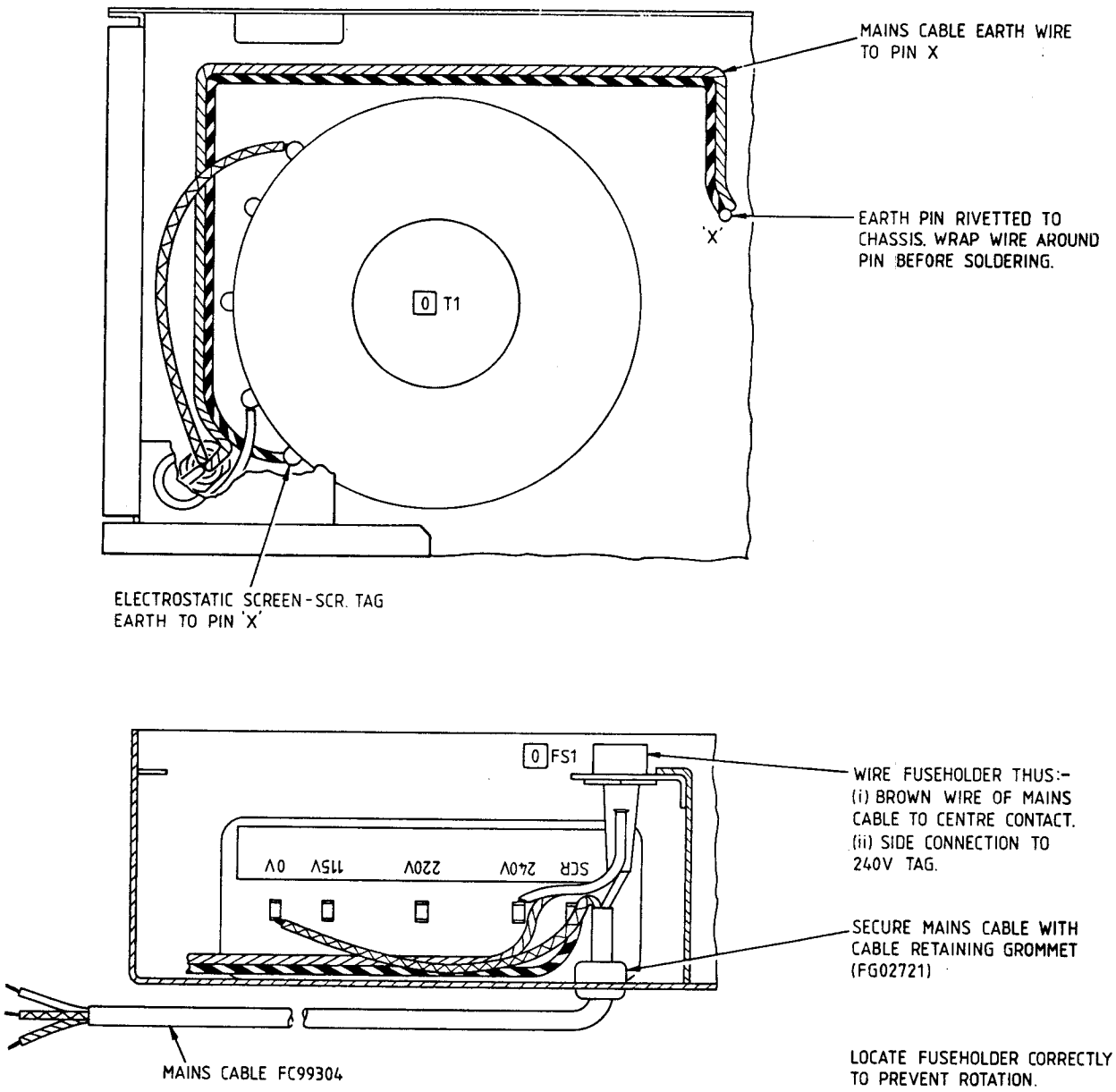

FIG 6.1 F490 TRANSCEIVER POWER WIRING DETAILS

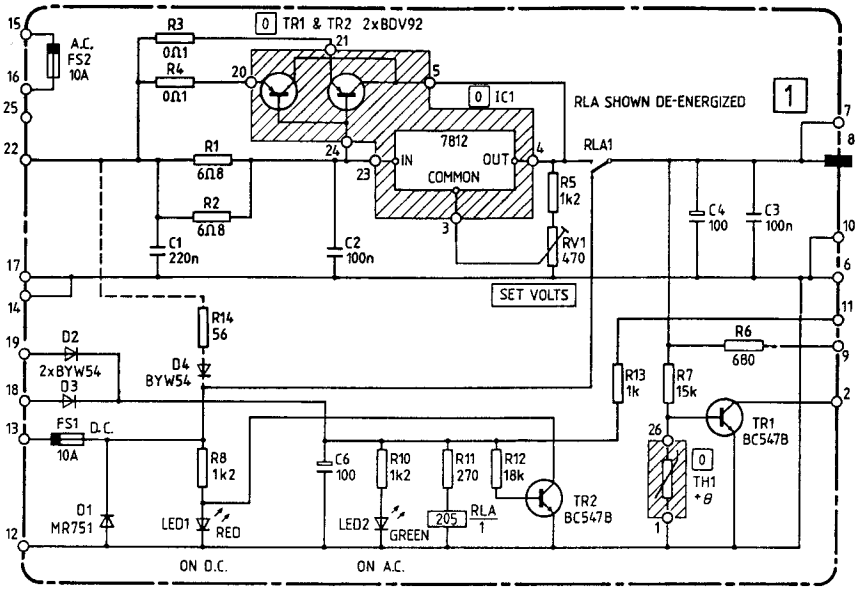

AT28724/02

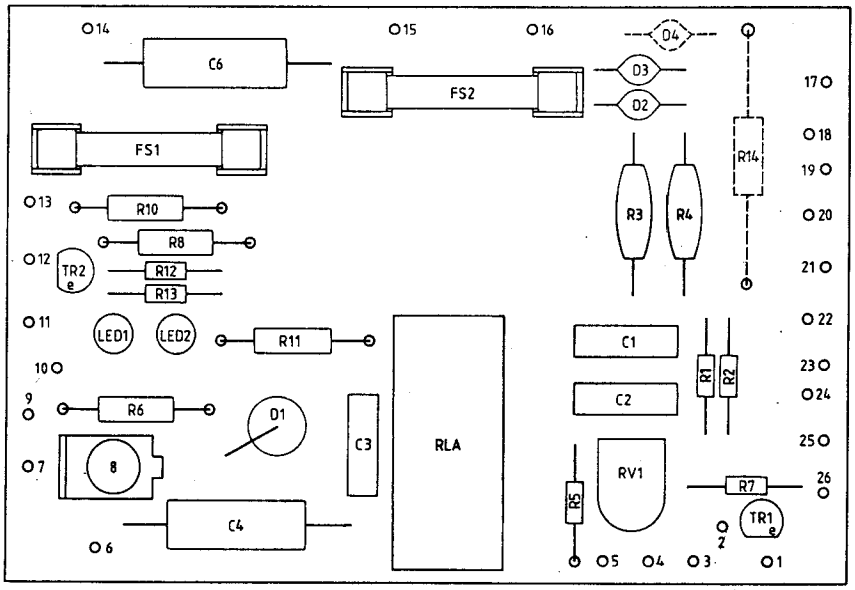

NOTE... R14 & D4 FITTED FOR TRICKLE CHARGING OF NICKEL CADMIUM CELLS.

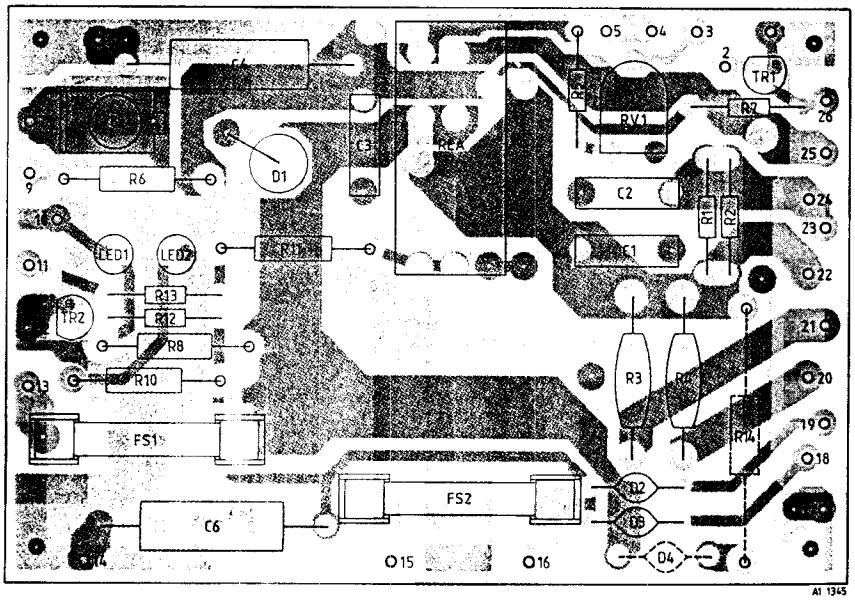

FIG 6.2 AC/12V DC REGULATOR
AT28724/02
CIRCUIT AND LAYOUT DIAGRAMS

PART 2
CONTROL OPTIONS

CONTENTS

ILLUSTRATIONS

LINK/SYSTEMS CONTROL MODULE AT28725/01
(FOR USE WITH PRIMARY OPTIONS 11 + 12 ON EARLY EQUIPMENTS ONLY)

INTRODUCTION

The Link/System control module provides an interface to the F490 series transmitter/receivers when used in link or systems applications. The board provides separate balanced 600Ω input and output connectors, transmit/receive keying, squelch defeat and a squelch logic output facilities. Simplex or duplex operation may be used.

TECHNICAL DESCRIPTION

Tx Audio

Tx audio enters the control board on SKC pins 14 and 15, is fed across T1 and amplified in IC1 (b). LK1 is linked in to provide a gain reduction of 20 db through R5. RV2 sets the Tx 600Ω sensitivity level and the output is fed to the transmitter board.

Rx Audio

Rx audio from PLF is applied, via the squelch gate IC3 (b) to the push-pull amplifier IC2. The output is fed across T2 to SKC pins 11 and 12. TR1 switches an impedance of 600Ω across T2 primary in the event of a power failure.

Tx Key

A Tx key 'lo' at SKC pin 6 is applied, via D4,8 to the NAND Schmitt gate IC4(b); the 'hi' at pin 4 produces a 'lo' at pin 10 which switches on TR3 causing LED2 (TX) to light providing TX 10V to PLE and also causes TR4 to conduct applying +15V to the relay line on PLE and SKC; if fitted, the antenna changeover relay operates to select the Tx antenna.

Squelch

A squelch 'lo' from the schmitt trigger on the receiver board switches on TR5 causing:

(i) LED3 (SQ) to light
(ii) The squelch gate IC3 (b) to open
(iii) TR7 to conduct providing a squelch output 'lo' through D14 to the SQUELCH LOGIC O/P on SKC pin 3

Squelch Defeat

A squelch defeat 'lo' on SKC pin 4 fed via D12, reverse biases D13; the voltage across zener diode D15 cuts off TR5 to close the squelch gate.

LK3 enables an engineer to defeat the squelch for test purposes.

Rx Inhibit

An Rx inhibit 'lo' at SKC pin 5 produces a 'hi' at IC4 pin 3 to hold off TR2 and inhibit Rx.

Tone Valid

A 'lo' from the tone option module fed in on PLF causes TR6 to conduct preventing TR5 from being turned on by the squelch schmitt trigger. When a valid tone is received the tone module gives a 'hi' output switching off TR6 and allowing TR5 to be switched on.

Engineers Handset

The engineers handset (EHS) is connected to SKB. Immediately the EHS is connected ground is applied to IC4 pin 9 which produces a 'hi' at pin 10 to hold off TR3 and inhibit the Tx condition.

Operation of the PTT switch on the EHS grounds the junction of D4/D8 to apply a 'lo' to IC4 pins 5 and 6; a 'lo' is produced at pin 10 causing TR3 to conduct and the transmit condition assumed. The 'lo' is also applied to D2/D6 producing a 'hi' at IC4 pin 1 to hold off TR2 and inhibit Rx.

Audio from the EHS microphone is fed directly to the transmitter board on PLE (EHS MIC).

Received audio from PLF is routed through R20 and transmit audio through R19 to IC1 pin2, then through C4 to the EHS earpiece at a level set by RV1.

Intercom

The intercom facility allows an engineer to talk to the Controller using the EHS; LK2 is made.

PARTS LIST
LINK/SYSTEMS CONTROL PCB
AT28725/01

Cct. Ref	Description	Part No.	Remarks
SEMICONDUCTORS & ICS			
IC1, 2	IC Dual Op Amp	FU99092	
IC3	IC4066 MOS	FU99104	
IC4	IC4093 MOS	FU99103	
TR1	Transistor BF245B	FV05900	
TR2–4	Transistor BC327	FV05975	
TR5,6	Transistor BC557B	FV05977	
TR7	Transistor BC337	FV05896	
D1	Zener Diode C5V6	FV05867	
D2–9	Diode 1N4148	FV05808	
D10	Zener Diode 6V8	FV05868	
D11–14	Diode 1N4148	FV05808	
D15	Zener Diode 4V7	FV05866	

RESISTORS

R1	10k	±5%	0,25W	c.film	PM01448
R2	680	±5%	0,25W	c.film	PM01434
R3	390	±5%	0,25W	c.film	PM01431
R4	10k	±5%	0,25W	c.film	PM01448
R5	1k2	±5%	0,25W	c.film	PM01437
R6	270	±5%	0,25W	c.film	PM01429
R7	330	±5%	0,25W	c.film	PM01430
R8	1k	±5%	0,25W	c.film	PM01436
R9,10	10k	±5%	0,25W	c.film	PM01448
R11	820	±5%	0,25W	c.film	PM01435
R12	1k5	±5%	0,25W	c.film	PM01438
R13	2k7	±5%	0,25W	c.film	PM01441
R14	1k	±5%	0,25W	c.film	PM01436
R15	18k	±5%	0,25W	c.film	PM01451
R16	3k3	±5%	0,25W	c.film	PM01442
R17	4k7	±5%	0,25W	c.film	PM01444
R18	10k	±5%	0,25W	c.film	PM01448
R19	22k	±5%	0,25W	c.film	PM01452
R20	4k7	±5%	0,25W	c.film	PM01444
R21	10k	±5%	0,25W	c.film	PM01448
R22,23	47k	±5%	0,25W	c.film	PM01456
R24	10	±5%	0,25W	c.film	PM01412
R25,26	1k8	±5%	0,25W	c.film	PM01439
R27	47k	±5%	0,25W	c.film	PM01456
R28	10k	±5%	0,25W	c.film	PM01448
R29	47k	±5%	0,25W	c.film	PM01456
R30	10k	±5%	0,25W	c.film	PM01448
R31,32	1k8	±5%	0,25W	c.film	PM01439
R33,34	10k	±5%	0,25W	c.film	PM01448
R35,36	1k	±5%	0,25W	c.film	PM01436
R37	1k2	±5%	0,25W	c.film	PM01437
R38,39	1k	±5%	0,25W	c.film	PM01436
R40	1k2	±5%	0,25W	c.film	PM01437
R41	10k	±5%	0,25W	c.film	PM01448
R42	3k3	±5%	0,25W	c.film	PM01442
R43	1k8	±5%	0,25W	c.film	PM01439
R44	1k2	±5%	0,25W	c.film	PM01437
R45	1k	±5%	0,25W	c.film	PM01436
R46	10k	±5%	0,25W	c.film	PM01448
R47	27k	±5%	0,25W	c.film	PM01453
R48	15k	±5%	0,25W	c.film	PM01450
R49	22k	±5%	0,25W	c.film	PM01452
R50	47k	±5%	0,25W	c.film	PM01456
R51,52	10k	±5%	0,25W	c.film	PM01448
RV1	2k2	±20%	Lin, Pot.	skel	PL99001
RV2	10k	±20%	Lin, Pot.	skel	PL01478
RV3	47k	±20%	Lin, Pot.	skel	PL01498

Cct. Ref	Description				Part No.	Remarks
CAPACITORS						
C1	470	±20%	10V	elec	PS99405	
C2	4n7	±10%	63V	cer plate	PN99813	
C3	1n	±10%	63V	cer plate	PN99811	
C4–7	4μ7	±20%	100V	elec	PS99458	
C8	10	±20%	63V	elec	PS99445	
C9–13	4n7	±10%	63V	cer plate	PN99813	
C14	33	±20%	35V	elec	PS99429	
C15						Not Used
C16	22n	±10%	63V	pes	PQ99515	
MISCELLANEOUS						
LED1,2	LED, red				FV05858	
LED3	LED, yellow				FV05930	
SKB	Socket, 7-way				FS44448	
SKC	Socket, 15-way				FS99081	
T1,2	Transformer				AL21246	
	Scr, pozi, pan, st, M3 x 8mm				QJ11902/X	2/SKC
	Nut, hex, st, M3				QA11605/X	2/SKC

For Service Manuals Contact
MAURITRON TECHNICAL SERVICES
8 Cherry Tree Rd, Chinnor
Oxon OX9 4QY
Tel:- 01844-351694 Fax:- 01844-352554
Email:- enquiries@mauritron.co.uk

DC SIGNALLING CONTROL MODULE AT28726/01

(FOR USE WITH PRIMARY OPTIONS 21–23,27)

INTRODUCTION

This control board enables the F490 series base stations to be controlled by a PC1 Controller using DC signalling over Post Office lines. Links are provided to enable a number of different switching circuit types to be used.

The Link details for this board are given in Tables 1 and 2.

Link	In/Out	Description
LK1 (–20db gain)	IN	Reduces gain of TX 600Ω line input amp, for line signals greater than –20 dbm
LK2 (INTERCOM)	IN	Provides intercom between EHS and Controller. Transmitter cannot be keyed by the handset with LK2 IN
LK3 (SQ DEF)	IN	Enables the Rx squelch to be opened for test purposes
LK4 (TT TEST)	IN	Enables talkthrough to be selected for test purposes
LK5 (TONE SQ/TT)	A TO B IN A TO C IN (VIA DIODE)	Connects tone decoder output to squelch logic circuit Connects tone decoder output to talkthrough logic circuit (See Talkthrough Description)
LK6 (TT DEL OFF)		Talkthrough Mode Only
	OUT	Transmitter remains on for two seconds (approx.) after Rx squelch closes
	IN	Talkthrough delay removed
LK7 (TD/SD)	OUT	'Lo' on LK9 pin J provides tone defeat
	IN	'Lo' on LK9 pin J provides squelch defeat
LK8, LK9	See Table 2	Controls DC line sensing logic for various switching circuit types.
LK10	IN	Connects POE sensing input to chassis. Used when separate signalling earth wire is not available

Table 1

Switching Circuit Type	Controlled Functions	LK8	LK9
01	Tx/Rx	IN	E–H,I–J
2B	Tx/Rx +T/T	OUT	A–H,F–G,I–J
2J	Tx/Rx + Linefail T/T	OUT	A–H,E–G,I–J
2N	Tx/Rx + Tone Defeat	OUT	A–H,C–J
3A	Tx/Rx + T/T + Tone Defeat	OUT	A–J,B–H,F–G
3B	Tx/Rx + Linefail T/T + Tone Defeat	OUT	A–J,B–H,E–G
4A	Tx/Rx + Linefail T/T	IN	C–H,E–G,I–J

Notes: (i) Types 01 and 4A are 2 wire systems and do not require a signalling earth
(ii) If Squelch Defeat is required instead of Tone Defeat LK7 must be made

Table 2

TECHNICAL DESCRIPTION

Tx Audio

The audio input is applied on PLA and developed across transformer T1; IC4(a) provides amplification and LK1 may be linked in circuit to provide a 20 db attenuation. RV2 sets the TX600Ω sensitivity. The audio is then applied to the Tx gate on IC6 pin 3, further amplified by IC4(b) and fed, via C10, to the transmitter board on PLE.

Rx Audio

The Rx AF output from the receiver board on PLF is applied through C12 to the squelch gate on IC6 pin 11. The audio on IC6 pin 10 is routed in two directions.

(i) Through RV4 (Talkthrough Level) to IC4 pin 2 when talkthrough is selected
(ii) Via R26, to IC5(a) which amplifies the signal and feeds it, via RV3 (Rx600Ω O/P Level), through the gate to the push-pull amplifier IC3 and across T1 to Lines 1 and 2.

TR1 across the output of the push-pull amplifier proves an effective open-circuit during normal operation but provides an impedance of 600Ω across T1 secondary in the event of a power failure.

DC Signalling

The DC signalling voltages on lines 1 and 2 are fed through the resistor networks R1,2,3, and R4,5,6 to the input side of the opto-couples IC1 and IC2; zener diodes D1,2 and D3,4 protect the circuit from transient voltages.

The input from the Post Office line may be any combination of +50V, –50V or 0V depending on the switching circuit type employed.

The voltages will determine which of the opto-couplers give an output to LK9 as follows:

Line 1 +50V	Pin D 'Lo'
Line 1 –50V	Pin C 'Lo'
Line 2 +50V	Pin B 'Lo'
Line 2 –50V	Pin A 'Lo'

Due to the action of the opto-couplers a signalling voltage on lines 1 or 2 will produce a 'lo' on IC1 or IC2 at pin 6 or 7.

IC7 is a NAND SCHMITT TRIGGER and, therefore, a 'lo' on pin 8 or 9 will give a 'hi' at pin 10 and hence a 'hi' at Pin F; a line fail situation will give a 'hi' at pins 8 and 9 and, therefore, a 'lo' at pin 10 which inverted by IC8 will provide a 'hi' at pin E.

The 'lo's' from IC1 and IC2 are also fed directly to the matrix providing a 'lo' at pin A (IC2 pin 7), pin B (IC2 pin 6), pin C (IC1 pin 7) and pin D (IC1 pin 6).

The output of the matrix pins G–J are designated as follows:

G–Talkthrough ('hi' active)
H–Tx ('lo' active)
I–10V (permanent 'hi')
J–Squelch/Tone Defeat ('lo' active)

The matrix is linked as required according to the type of switching circuit used.

Note: If permanent Talkthrough is required link I-G. On no account should LK4 be used as it will inhibit the function of temperature shutdown.

Receive

In the quiescent state the control board is in the receive condition. The 'lo' at IC8 pin 9 is inverted and the resultant 'lo' at pin 12 causes TR5 to conduct providing 10V Rx to the receiver board [2] on PLF.

Tx Key

A Tx 'lo' at H is fed to IC7 pin 6, the resulting 'hi' is inverted by IC8(d) and causes TR3 to conduct providing Tx 10V to the Transmitter module. Further inversion by IC8(f) produces a 'hi' which is applied, via R57, to hold off TR5 and thus prevent:

(i) Rx10V being fed to the receiver module.
(ii) TR6 conducting and hence keeping the squelch gate closed in the transmit conditions.

Squelch

A squelch 'lo' from the schmitt trigger on the receiver module switches on TR6 (providing TR5 is conducting) causing:

(i) LED3 (Squelch) to light
(ii) The squelch gate to open
(iii) D14 to conduct

Tone Defeat

A 'lo' at matrix pin J gives a 'hi' at IC7 pin 11, this is fed via D15, to cut off TR7 (ie A Tone Valid input is simulated).

This enables a squelch input from the receiver to switch on TR6.

Squelch Defeat

The 'hi' on IC7 pin 11 appears as a 'lo' on IC8 pin 4 which with LK7 (TD/SD) made switches on TR6 and hence opens the squelch gate.

LK3 enables an engineer to defeat the squelch for test purposes.

Engineers Handset

The engineers handset (EHS) is connected to SKB. Immediately the EHS is connected ground is applied to D9, 10 to inhibit Talkthrough and Transmit.

Operation of the PTT switch on the EHS grounds pin 5 of IC7 to produce a 'hi' at pin 4 and therefore establish the Tx condition.

Audio from the EHS microphone is fed directly to the transmitter board on PLE (EHS MIC).

Audio from the receiver board through R21, and on transmit through R20 is fed, via the EHS amplifier, to the earpiece at a level set by RV1.

Intercom

The intercom facility allows an engineer to talk to the Controller using the EHS; LK2 is made.

When a 50V Tx key signal is received from the Controller the Tx audio gate is opened and audio from the line on RV2 is applied to IC5 pin 6 then fed, via C1, to the EHS earpiece at a level set by RV1.

D11 prevents the transmitter from being keyed by the PTT switch when intercom is selected.

The 'hi' on IC8 pin 2 opens the intercom gate.

Audio from the EHS microphone is fed to PLE (EHS MIC), is amplified, and reappears on PLE (AF RETURN), it then passes through the intercom gate and is applied to the line.

Temperature Shutdown

The temperature shutdown input appears as a 'lo' generated by the regulator board. D9 and D10 are made to conduct thus inhibiting talkthrough and transmit.

Talkthrough

A talkthrough 'hi' at matrix pin G is fed through R42 and inverted by IC8(e) the 'lo' at pin 10 switches on TR2 lighting LED1 (TT).

When the squelch opens a 'lo' from the receiver board switches on TR6 causing D14 to conduct feeding a 'hi' to IC7 pin 1. The resultant 'lo' at pin 3 switches on TR3 providing 10V Tx to the transmitter board.

The 'hi' at IC7 pin 1 is 'held' by C21 so that when the squelch closes there is a delay before the 10V Tx is removed; the delay is determined by the time constant R59/C21. With LK6 made R60 is brought into circuit effectively removing the delay.

LK4 (T/T TEST) enables talkthrough to be selected for test purposes by switching on TR2. LK4 MUST NOT be used to provide permanent talkthrough.

Talkthrough may also be initiated by the tone option module (if fitted) by connecting a diode across pins A and C of LK5. The way in which the diode is connected and the state of the T/T switch at the PC1 controller determine the mode of talkthrough selected.

LK5	T/T Switch	Talkthrough Mode
A —▷|— C	OFF	No Talkthrough
	ON	Talkthrough (Tone Mobiles Only)
A —|▷— C	OFF	Talkthrough (Tone Mobiles Only)
	ON	Talkthrough (All Mobiles)

A TONE VALID 'hi' from the tone option board is applied, via LK5, and inverted by IC8(e) the 'lo' at pin 10 switches on TR2 to produce talkthrough as before.

PARTS LIST

DC SIGNALLING CONTROL PCB

AT28726/01

Cct. Ref	Description	Part No.	Remarks
SEMICONDUCTORS & ICS			
IC1,2	IC Dual Opto-isolator	FU99350	
IC3–5	IC Dual Op-amp	FU99092	
IC6	IC 4066MOS	FU99104	
IC7	IC 4093 MOS	FU99103	
IC8	IC 40106	FU99126	
TR1	Transistor BF245B	FV05900	
TR2	Transistor BC557B	FV05977	
TR3–5	Transistor BC327	FV05975	
TR6,7	Transistor BC557B	FV05977	
TR8	Transistor BC547B	FV05891	
D1–4	Zener Diode 15V	FV05872	
D5	Zener Diode C5V6	FV05867	
D6–11	Diode 1N4148	FV05808	
D12	Zener Diode 6V8	FV05868	
D13–15	Diode 1N4148	FV05808	

RESISTORS

R1	2k2	±5%	1,6W	c.film	PL51203
R2	680	±5%	0,25W	c.film	PM01434
R3,4	270	±5%	0,25W	c.film	PM01429
R5	680	±5%	0,25W	c.film	PM01434
R6	2k2	±5%	0,25W	c.film	PL51203
R7	22k	±5%	0,25W	c.film	PM01452
R8	4k7	±5%	0,25W	c.film	PM01444
R9	390	±5%	0,25W	c.film	PM01431
R10	680	±5%	0,25W	c.film	PM01434
R11	10k	±5%	0,25W	c.film	PM01448
R12	82k	±5%	0,25W	c.film	PM01459
R13.14	4k7	±5%	0,25W	c.film	PM01444
R15	3k9	±5%	0,25W	c.film	PM01443
R16	68k	±5%	0,25W	c.film	PM01458
R17,18	10k	±5%	0,25W	c.film	PM01448
R19	100k	±5%	0,25W	c.film	PM01460
R20	27k	±5%	0,25W	c.film	PM01453
R21	56k	±5%	0,25W	c.film	PM01457
R22	10k	±5%	0,25W	c.film	PM01448
R23	22k	±5%	0,25W	c.film	PM01452
R24	15k	±5%	0,25W	c.film	PM01450
R25	4k7	±5%	0,25W	c.film	PM01444
R26	10k	±5%	0,25W	c.film	PM01448
R27	100k	±5%	0,25W	c.film	PM01460
R28,29	47k	±5%	0,25W	c.film	PM01456
R30,31	10k	±5%	0,25W	c.film	PM01448
R32–35	33k	±5%	0,25W	c.film	PM01454
R36	10k	±5%	0,25W	c.film	PM01448
R37	470	±5%	0,25W	c.film	PM01432
R38	10k	±5%	0,25W	c.film	PM01448
R39	1k8	±5%	0,25W	c.film	PM01439
R40	10k	±5%	0,25W	c.film	PM01448
R41	1k	±5%	0,25W	c.film	PM01436
R42	4k7	±5%	0,25W	c.film	PM01444
R43–45	10k	±5%	0,25W	c.film	PM01448
R45A	560	±5%	0,25W	c.film	PM01433
R46,46A	2k2	±5%	0,25W	c.film	PM01440
R47	4k7	±5%	0,25W	c.film	PM01444
R48	10k	±5%	0,25W	c.film	PM01448
R49	1k2	±5%	0,25W	c.film	PM01437
R50	1k	±5%	0,25W	c.film	PM01436
R51	2k2	±5%	0,25W	c.film	PM01440
R52	1k	±5%	0,25W	c.film	PM01436
R53	10k	±5%	0,25W	c.film	PM01448

Cct. Ref	Description				Part No.	Remarks

RESISTORS (Cont'd)

R54	3k3	±5%	0,25W	c.film	PM01442	
R55	1k2	±5%	0,25W	c.film	PM01437	
R56	2k2	±5%	0,25W	c.film	PM01440	
R57,58	1k	±5%	0,25W	c.film	PM01436	
R59	150k	±5%	0,25W	c.film	PM01462	
R60	3k3	±5%	0,25W	c.film	PM01442	
R61	1k2	±5%	0,25W	c.film	PM01437	
R62	47k	±5%	0,25W	c.film	PM01456	
R63	4k7	±5%	0,25W	c.film	PM01444	
R64,65	10k	±5%	0,25W	c.film	PM01448	
R66	22k	±5%	0,25W	c.film	PM01452	
R67	10k	±5%	0,25W	c.film	PM01448	
R68	47k	±5%	0,25W	c.film	PM01456	
R69–71	10k	±5%	0,25W	c.film	PM01448	
R72	4k7	±5%	0,25W	c.film	PM01444	
RV1	2k2	±20%	Lin, Pot,	skel	PL99001	
RV2,3	47k	±20%	Lin, Pot,	skel	PL01498	
RV4	10k	±20%	Lin, Pot,	skel	PL01478	

CAPACITORS

C1	4μ7	±20%	100V	elec	PS99458	
C2	2μ2	±10%	250V	poly	PQ38181	
C3	4n7	±10%	63V	cer plate	PN99813	
C4	4μ7	±20%	100V	elec	PS99458	
C5	180p	±2%	63V	cer plate	PN99774	
C6	33	±20%	35V	elec	PS99429	
C7	4n7	±10%	63V	cer plate	PN99813	
C8	330p	±2%	63V	cer plate	PN99777	
C9–12	4μ7	±20%	100V	elec	PS99458	
C13–18	4n7	±10%	63V	cer plate	PN99813	
C19,20	4μ7	±20%	100V	elec	PS99458	
C21	10	±20%	100V	elec	PS99459	
C22	33	±20%	35V	elec	PS99429	
C23	270p	±2%	63V	cer plate	PN99776	

ELECTRICAL ITEMS

LED1,2	LED, red				FV05858	
LED3	LED, yellow				FV05930	
SKA	Socket, 5-way				FS44449	
SKB	Socket, 7-way				FS44448	
T1	Transformer				AL21246	

LINK/SYSTEMS (WITH TALKTHROUGH) CONTROL MODULE AT28817
(FOR USE WITH PRIMARY OPTIONS 11–13,51,57,58)

The Link/Systems (with Talkthrough) control module provides an interface to the F490 series transmitter/receivers when used in link or systems applications.

The board provides separate balanced 600Ω input and output connections, talkthrough, transmit/receive keying, squelch defeat, and squelch logic output facilities. Simplex or duplex operation may be used.

The link details for this board are given in Table 1.

Link	In/Output	Description
LK1 (–20db GAIN)	IN	Reduces gain of Tx600Ω line input amp for line signals greater than –20dbm.
LK3 (SQ DEF)	IN	Enables Rx squelch to be opened for test purposes
LK4 (TT TEST)	IN	Enables Talkthrough to be selected for test purposes
LK5 (TONE SQ/TT)	A TO B IN	Connects tone decoder output to squelch logic circuit
	A TO C IN (VIA DIODE)	Connects tone decoder output to talkthrough logic circuit
LK6 (TT DEL OFF)		Talkthrough Mode Only
	OUT	Transmitter remains on for two seconds (approx.) after Rx squelch drops out
	IN	Talkthrough delay removed
LK7 (TD/SD)	OUT	'Lo' on SKC pin 4 provides tone defeat
	IN	'Lo' on SKC pin 4 provides squelch defeat
LK8 (BUSY/TONE)		Tone Options Only
	OUT	The presence of a carrier without a valid tone provides a logic 'hi' at SKC pin 13 to drive a BUSY lamp
	IN	The presence of a carrier with a valid tone provides a logic 'lo' to SKC pin 13 to switch external equipment
LK9 (T/T SENSE)	A TO B IN	'Lo' on SKC pin 2 (T/T) selects talkthrough
	A TO C IN	'Lo' on SKC pin 2 (T/T) inhibits continuous talkthrough
LK10 (T/T LATCH)		3/5 Tone Selected T/T Sytems Only Latches equipment in talkthrough until the Rx squelch closes and the transmitter is turned off

Table 1

TECHNICAL DESCRIPTION

Tx Audio

Tx audio enters the control board on SKC pins 14 and 15 is fed across T1 and amplified in IC1(a); the output is fed, via the Tx gate IC4(a) and amplifier IC3(a) to the transmitter board. LK1 enables the gain of IC1(a) to be reduced by 20db through R3,4 and RV2 sets the Tx600Ω sensitivity level.

Rx Audio

Rx audio from the receiver board is fed via the squelch gate IC4(c) to the amplifier IC3(b); the amplifier output is routed in two directions:

(i) Via RV3 (Rx 600Ω O/P LEVEL), to the Rx 600Ω output amplifier IC2.
(ii) Through RV4 (T/T LEVEL) to the talkthrough gate

IC2 amplifies the Rx audio and feeds it across T2 to SKC pins 11 and 12. TR1 provides an effective open circuit during normal operation but provides an impedance of 600Ω across T2 in the event of a power failure.

Tx Key

A Tx Key 'Lo' on SKC is inverted by the NAND schmitt gate IC6(d), the 'hi' at pin 8 opens the Tx gate and provides a 'lo' at pin 10 to switch on TR3 and TR10; LED2 lights and Tx 10V is supplied to the transmitter board and 13,5V is applied to the relay line to operate the antenna changeover relay. D5 inhibits talkthrough in the transmit condition.

Squelch

A squelch 'lo' from the receiver board switches on TR8 applying a 'hi' to TR9 providing a 'lo' at SKC pin 13 to drive a BUSY lamp, and to the NAND schmitt gate IC5(b), to switch on TR6, when a 'hi' is present at IC5 pin 5.

The conduction of TR6 causes:

(i) LED4 (SQ) to light
(ii) The squelch gate IC4(b & c) to operate
(iii) TR5 to conduct providing a squelch logic output 'lo' to SKC

Tone Defeat

A 'lo' on SKC pin 4 is fed to TR7, via D11, to provide a 'hi' to IC5 pin 5 enabling a carrier 'hi' on pin 6 to open the squelch.

Squelch Defeat

The 'lo' on SKC pin 4 is applied to TR6, via LK7 (IN), switching it on thus opening the squelch.

LK3 enables an engineer to defeat the squelch for test purposes.

Engineers Handset

The engineers handset (EHS) is connected to SKB. Immediately the EHS is connected ground is applied to D6,7 to inhibit talkthrough and transmit.

Operation of the PTT switch on the EHS grounds IC6 pin 9 producing a 'hi' at pin 8 which opens the Tx gate and turns on TR3, via IC6(e), to establish the transmit condition.

The 'lo' from SKB pin 5 also inhibits the receiver by applying a 'hi' to TR4 base.

Audio from the EHS microphone is fed directly to the transmitter board.

Received audio on PLF is routed, via the squelch gate and R8, and transmit audio, via the Tx gate and R6, to the EHS amplifier IC1(b) then through C20 to the EHS earpiece at a level set by RV1.

Talkthrough

A 'lo' at SKC pin 2 selects talkthrough according to the position of LK9 (See Table 1).

With LK9 linked A to B the 'lo' at SKC produces a 'hi' at IC6 pin 4 which is fed through IC6(c) to turn on TR2.

When TR2 conducts LED1 (T/T) lights and a 'hi' is applied to IC5 pin 2. A squelch 'lo' causes TR6 to conduct and the 'hi' applied to IC5 pin 1 will result in a 'lo' at pin 11 switching on TR3; LED2 (Tx) lights and the transmit condition is assumed.

The 'hi' input to IC5(d) is stored in C9 so when the squelch closes there is a delay (determined by the time constant R30/C9) before the transmitter is unkeyed. When LK6 is made R29 is brought into circuit effectively removing the delay.

With LK9 linked A to C the 10V line provides the 'hi', via R55, which gives talkthrough; the presence of a 'lo' at SKC pin 2 pulls down the 10V and so inhibits talkthrough.

LK4 (T/T TEST) enables talkthrough to be selected for test purposes by switching on TR2. LK4 MUST NOT be used to provide permanent talkthrough.

Talkthrough may also be initiated by the tone option module (if fitted) by connecting a diode across pins A and C of LK5. The way in which the diode is connected and the state of the T/T switching input at SKC pin 2 determine the mode of talkthrough selected.

LK5	SKC pin 2	Talkthrough Mode
A —▷|— C	Hi	No Talkthrough
	Lo	Tone Mobiles Only
A —|▷— C	Hi	Tone Mobiles Only
	Lo	All Mobiles

LK5 A–B: A TONE VALID 'hi' is applied to IC5 enabling TR6 to conduct and open the squelch.

LK5 A —\|▷— C: A TONE VALID 'hi' is fed to R62/R63 to initiate talkthough for tone mobiles only when the talkthrough switch is off.

LK5 A —◁\|— C: The presence of an invalid tone will apply a 'lo' to R62/R63 thus inhibiting talkthrough. A TONE VALID 'hi' will effectively remove the 'lo' from R62/R63 allowing talkthrough to occur.

When made, LK10 (T/T LATCH) feeds the Tx 10V line to IC6(c) keeping the equipment in talkthrough until the squelch closes and TR3 cuts off. LK10 is only used with 5 tone controlled talkthrough system.

With LK8 (BUSY/TONE) made a 'lo' from the TONE VALID output holds off TR9. A TONE VALID 'hi' allows TR9 to conduct providing a 'lo' to SKC pin 13 for switching an external unit.

PARTS LIST

LINK/SYSTEMS (WITH TALKTHROUGH) CONTROL PCB

AT28817

Cct. Ref	Description				Part No	Remarks
SEMICONDUCTORS & ICS						
IC1–3	IC Dual Op. Amp				FU99092	
IC4	IC 4066 MOS				FU99104	
IC5	IC4093 MOS				FU99103	
IC6	IC40106				FU99126	
TR1	Transistor BF245B				FV05900	
TR2	Transistor BF557B				FV05977	
TR3,4	Transistor BC327				FV05975	
TR5	Transistor BC337				FV05896	
TR6–8	Transistor BC557B				FV05977	
TR9	Transistor BC337				FV05896	
TR10	Transistor BC327				FV05975	
D1	Zener Diode C5V6				FV05867	
D2–7	Diode 1N4148				FV05808	
D8	Zener Diode 6V8				FV05868	
D9–14	Diode 1N4148				FV05808	
RESISTORS						
R1	680	±5%	0,25W	c.film	PM01434	
R2	22k	±5%	0,25W	c.film	PM01452	
R3	82k	±5%	0,25W	c.film	PM01459	
R4	8k2	±5%	0,25W	c.film	PM01447	
R5	330	±5%	0,25W	c.film	PM01430	
R6	100k	±5%	0,25W	c.film	PM01460	
R7	3k3	±5%	0,25W	c.film	PM01442	
R8	56k	±5%	0,25W	c.film	PM01457	
R9	22k	±5%	0,25W	c.film	PM01452	
R10	390	±5%	0,25W	c.film	PM01431	
R11	270	±5%	0,25W	c.film	PM01429	
R12	330	±5%	0,25W	c.film	PM01430	
R13,14	10k	±5%	0,25W	c.film	PM01448	
R15	68k	±5%	0,25W	c.film	PM01458	
R16	4k7	±5%	0,25W	c.film	PM01444	
R17	47k	±5%	0,25W	c.film	PM01456	
R18	220k	±5%	0,25W	c.film	PM01464	
R19	47k	±5%	0,25W	c.film	PM01456	
R20	4k7	±5%	0,25W	c.film	PM01444	
R21–23	10k	±5%	0,25W	c.film	PM01448	
R24	1k	±5%	0,25W	c.film	PM01436	
R25	10k	±5%	0,25W	c.film	PM01448	
R26,27						Not Used
R28	1k	±5%	0,25W	c.film	PM01436	
R29	3k3	±5%	0,25W	c.film	PM01442	
R30	150k	±5%	0,25W	c.film	PM01462	
R31–33	4k7	±5%	0,25W	c.film	PM01444	
R34	1k	±5%	0,25W	c.film	PM01436	
R35,36	4k7	±5%	0,25W	c.film	PM01444	
R37–39	1k	±5%	0,25W	c.film	PM01436	
R40	2k2	±5%	0,25W	c.film	PM01440	
R41–43	10k	±5%	0,25W	c.film	PM01448	
R44	2k2	±5%	0,25W	c.film	PM01440	
R45–50	10k	±5%	0,25W	c.film	PM01448	
R51	220k	±5%	0,25W	c.film	PM01464	
R52	47k	±5%	0,25W	c.film	PM01456	
R53	10k	±5%	0,25W	c.film	PM01448	
R54–57	1k8	±5%	0,25W	c.film	PM01439	
R58	47k	±5%	0,25W	c.film	PM01456	
R59–66	10k	±5%	0,25W	c.film	PM01448	
R67,68	4k7	±5%	0,25W	c.film	PM01444	
R69	10k	±5%	0,25W	c.film	PM01448	
R70	10	±5%	0,25W	c.film	PM01412	

Cct. Ref	Description				Part No.	Remarks
RESISTORS (Cont'd)						
R71	2k2	±5%	0,25W	c.film	PM01440	
RV1	2k2	±20%	Lin, Pot,	skel	PL99001	
RV2,3	10k	±20%	Lin, Pot,	skel	PL01478	
RV4	2k2	±20%	Lin, Pot,	skel	PL99001	
CAPACITORS						
C1	4n7	±10%	63V	cer plate	PN99813	
C2	180p	±2%	63V	cer plate	PN99774	
C3	100n	±10%	63V	poly	PQ99511	
C4	4μ7	±20%	100V	elec	PS99458	
C5	330p	±2%	63V	cer plate	PN99777	
C6	4n7	±10%	63v	cer plate	PN99813	
C7	4μ7	±20%	100V	elec	PS99458	
C8	470	±20%	10V	elec	PS99405	
C9	10	±20%	100V	elec	PS99459	
C10	33	±20%	35V	elec	PS99429	
C11–14	4n7	±10%	63V	cer plate	PN99813	
C15	10	±20%	100V	elec	PS99459	
C16–18	4n7	±10%	63V	cer plate	PN99813	
C19	100p	±2%	63V	cer plate	PN99792	
C20	4μ7	±20%	100V	elec	PS99458	
C21	4n7	±10%	63V	cer plate	PN99813	
C22						Not Used
C23	22n	±10%	63V	pes	PQ99515	
MISCELLANEOUS						
SKB	Socket, 7-way				FS44448	
SKC	Socket, 15-way				FS99081	
	Socket, 8-way, DIL				FS99144	1/IC1–3
	Socket, 14-way, DIL				FS99145	1/IC4–6
LED1–3	LED, red				FV05858	
LED4	LED, yellow				FV05930	
T1,2	Transformer				AL21246	
	Scr, pozi, pan, st, M3 x 10 mm				QJ11903/X	2/SKC
	Nut, hex, st, M3				QA11605/X	2/SKC

MC490 CONTROL MODULE AT28824
(FOR USE WITH PRIMARY OPTION 41,42,47)

INTRODUCTION

The MC490 control module enables the F490 series equipment to be used with the Microphone/Controller and a loudspeaker.

The board provides separate input and output lines, a 3ΩAF amplifier (with DC controlled volume), talkthrough, transmit/receive keying and squelch defeat facilities. Simplex or duplex operation may be used.

The link details for this board are given in Table 1.

Link	In/Out	Description
LK1 (TX AF)	A TO C IN B TO D IN E TO G IN	For use with the mic/controller LK1 is permanently linked A–C,E–G and B–D, to bypass T1 and feed the line audio input to IC1(a)
	A TO B IN C TO D IN E TO F IN	Enables a 600Ω audio input to be applied to the board
LK2 (TX AF GAIN)	IN	Increases gain of TX AF amplifier by 20db (approx.)
LK3 (T/T TEST)	IN	Enables talkthrough to be selected for test purposes
LK4 (TT DEL OFF)	OUT	Talkthrough Mode Only Transmitter remains on for two seconds (approx.) after Rx squelch closes
	IN	Talkthrough delay removed
LK5 (T/T LATCH)	IN	3/5 Tone Selected T/T Systems Only Latches equipment in talkthrough until the Rx squelch closes and the transmitter is turned off
LK6 (SQ DEF)	IN	Enables Rx squelch to be opened for test purposes
LK7 (TD/SD)	OUT	'Lo' on SKC pin 4 provides tone defeat
	IN	'Lo' on SKC pin 4 provides squelch defeat
LK8 (TONE SQ/TT)	A TO B IN (VIA DIODE)	Connects tone decoder output to talkthrough logic circuit
	A TO C IN	Connects tone decoder output to squelch logic circuit
	C TO D IN	Provides an external access to the squelch through SKC pin 10
LK9 (DUPLEX)	OUT	Simplex operation selected
	IN	Duplex operation selected

Table 1

Note: Wire links WL1,2 and 3 may be removed to allow SKC pins 13, 10 and 9 to be used for non standard modifications (eg: Driving an auxilliary lamp circuit).

TECHNICAL DESCRIPTION

Tx Audio

Audio from the Microphone/Controller enters the board on SKC pins 14 and 15 and is fed, via C1,7 and R3 to the Tx AF amplifier IC1(a). The output is applied, via RV2 (TX AF GAIN), to the Tx AF gate IC4(a). LK2 enables the gain of IC1(a) to be increased by 20db.

When the Tx gate is opened audio is fed to a second amplifier IC3(a) whose output is applied through C16 to TR5 and through C17 to the transmitter board.

As the output from IC3(a) increases above 1V (approx.), TR5 conducts which in turn reduces the impedance of R3 thus reducing the input to IC1(a).

Rx Audio

Rx audio from the receiver board is fed, via the squelch gate IC4(b) and buffer IC3(b) to the EHS amplifier and the voltage controlled attenuator IC8. The volume control on the microphone type controller varies the amount of attenuation in IC8 and therefore the audio level applied to amplifier IC7 and hence the loudspeaker. Increasing the volume control resistance increases the attenuation in IC8.

Tx Key

A Tx Key 'lo' at SKC is inverted by IC6(e) providing a 'hi' to open the Tx gate and enable IC5(e) to produce a 'lo' at pin 10.

The 'lo' switches on TR6 applying 15V to the relay line causing the antenna changeover relay to operate and TR9 to conduct which lights LED2 (TX) and supplies Tx 10V to the transmitter board.

IC6(d) inverts the 'lo' cutting off TR10 to inhibit the receiver.

Squelch

A squelch 'lo' from the receiver board turns on TR12 applying a 'hi' to TR13 (providing a 'lo' to the BUSY line on SKC) and IC5 pin 13. When a 'hi' is present at IC5 pin 12 the resultant 'lo' on pin 11 turns on TR11 causing:

(i) LED4 (SQ) to light
(ii) The squelch gate IC4 (b & c) to operate
(iii) A 'hi' to be applied to IC5 pin 2

Tone Defeat

A 'lo' on SKC pin 4 is inverted by IC6(c) and fed, via D8, to IC5 pin 12. The presence of a TONE VALID 'hi' on IC5 pin 13 produces a 'lo' output which switches on TR11 causing the squelch to open.

Squelch Defeat

The 'lo' at SKC pin 4 produces a 'lo' on IC6 pin 13 which is fed, via LK9, D9, to TR11 causing it to conduct and open the squelch.

Engineers Handset

The engineers handset (EHS) is connected to SKB. Immediately the EHS is connected IC5 pin 8 is grounded preventing talkthrough and transmissions from the Microphone/Controller.

Operation of the PTT switch grounds IC6 pin 10 producing a 'hi' at pin 11 to open the Tx gate and turn on TR9 establishing the transmit condition. The receiver is inhibited through IC6(d) and TR10.

Rx audio from PLF is routed, via the squelch gate and R18, to the EHS amplifier IC2(b) while Tx audio from IC1(a) is passed via the Tx gate and R17. The audio output at pin 7 is fed to the earpiece at a level set by RV1 (EHS LEVEL).

Talkthrough

Operation of the TT switch on the Microphone/Controller applies a 'lo' to SKC pin 2, TR2 turns on and the output is fed as follows:

(i) Through D7 to hold off TR9 and inhibit the transmit condition.
(ii) Through D7, IC6(a) to turn on TR10, initiating the receive condition.
(iii) Via IC5(b) to turn on TR7 enabling the talkthrough mode as indicated by LED1 (T/T).

A squelch 'lo' from the receiver board produces at 'hi' at IC5 pin 2 (see squelch description) resulting in a 'lo' at pin 3 which turns on TR8. A 'hi' is applied to IC6(b) which is inverted and causes TR9 to conduct and the transmit condition to be initiated; the receiver is inhibited.

The 'hi' on the collector of TR8 is stored in C39 so when the squelch closes there is a delay before the transmitter is unkeyed. The delay is determined by the time constant R58/C39 and may be removed by making LK4 which brings R59 into circuit.

LK3 (T/T TEST) enables talkthrough to be selected for test purposes by switching on TR2. LK3 MUST NOT be used to provide permanent talkthrough.

Talkthrough may also be initiated by the tone option module–a diode is connected across LK8 pins A and B. The way in which the diode is connected and the position of the TT switch on the microphone determine the mode of talkthrough selected.

LK5	TT Switch	Talkthrough Mode
A  B	OFF	No Talkthrough
	ON	Tone Mobiles Only
A  B	OFF	Tone Mobiles Only
	ON	All Mobiles

LK8 A  B:– A TONE VALID 'hi' is fed via R72,73, to IC5 pin 6 initiating talkthrough for tone mobiles only when the TT switch is off.

LK8 A  B:– The presence of an invalid tone will apply a 'lo' to IC5(b) thus inhibiting, talkthrough even with the TT switch on. A TONE VALID 'hi' will remove the 'lo' allowing talkthrough to take place provided the TT switch is on.

LK5 (T/T LATCH) is normally used for 3/5 tone systems and when made the Tx10V line is connected through D5 to IC5 pin 6 locking the equipment in talkthrough until squelch closes and TR9 is cut off.

PARTS LIST

MC490 CONTROL PCB
AT28824

Cct. Ref	Description				Part No	Remarks
SEMICONDUCTORS & ICS						
IC1–3	IC Dual Op-Amp				FU99092	
IC4	IC4066 MOS				FU99104	
IC5	IC4093 MOS				FU99103	
IC6	IC40106				FU99126	
IC7	IC Audio Amp				FU08027	Part of AT14719
IC8	IC				FU07686	
TR1,2	Transistor BC557B				FV05997	
TR3	Transistor BF245B				FV05900	
TR4,5	Transistor BC547B				FV05891	
TR6	Transistor BC327				FV05975	
TR7,8	Transistor BC557B				FV05977	
TR9,10	Transistor BC327				FV05975	
TR11,12	Transistor BC557B				FV05977	
D1	Diode 1N4148				FV05808	
D2	Zener Diode C5V6				FV05867	
D3	Zener Diode 6V8				FV05868	
D4–10	Diode 1N4148				FV05808	
RESISTORS						
R1	680	±5%	0,25W	c.film	PM01434	
R2	4k7	±5%	0,25W	c.film	PM01444	
R3	22k	±5%	0,25W	c.film	PM01452	
R4	4k7	±5%	0,25W	c.film	PM01444	
R5	1k2	±5%	0,25W	c.film	PM01437	
R6 SOT	1k	±5%	0,25W	c.film	PM01436	
	1k2	±5%	0,25W	c.film	PM01437	
	1k5	±5%	0,25W	c.film	PM01438	
	1k8	±5%	0,25W	c.film	PM01439	
	2k2	±5%	0,25W	c.film	PM01440	See SELECT-ON-TEST PROCEDURES, Section 4
	2k7	±5%	0,25W	c.film	PM01441	
	3k3	±5%	0,25W	c.film	PM01442	
	3k9	±5%	0,25W	c.film	PM01443	
	4k7	±5%	0,25W	c.film	PM01444	
	5k6	±5%	0,25W	c.film	PM01445	
R7	47k	±5%	0,25W	c.film	PM01456	
R8	33k	±5%	0,25W	c.film	PM01454	
R9	10k	±5%	0,25W	c.film	PM01448	
R10	33k	±5%	0,25W	c.film	PM01454	
R11	10k	±5%	0,25W	c.film	PM01448	
R12	3k3	±5%	0,25W	c.film	PM01442	
R13	33k	±5%	0,25W	c.film	PM01454	
R14	100k	±5%	0,25W	c.film	PM01460	
R15	47k	±5%	0,25W	c.film	PM01456	
R16	220k	±5%	0,25W	c.film	PM01464	
R17	100k	±5%	0,25W	c.film	PM01460	
R18	56k	±5%	0,25W	c.film	PM01457	
R19	2k2	±5%	0,25W	c.film	PM01440	
R20	3k3	±5%	0,25W	c.film	PM01442	
R21	47k	±5%	0,25W	c.film	PM01456	
R22	68k	±5%	0,25W	c.film	PM01458	
R23	10k	±5%	0,25W	c.film	PM01448	
R24	47k	±5%	0,25W	c.film	PM01456	
R25	22k	±5%	0,25W	c.film	PM01452	
R26	1k	±5%	0,25W	c.film	PM01436	
R27	2k2	±5%	0,25W	c.film	PM01440	
R28	27k	±5%	0,25W	c.film	PM01453	
R29	390k	±5%	0,25W	c.film	PM01467	
R30	33k	±5%	0,25W	c.film	PM01454	
R31	150	±5%	0,25W	c.film	PM01426	
R32,33	47k	±5%	0,25W	c.film	PM01456	

Cct. Ref	Description				Part No	Remarks

RESISTORS (Cont'd)

R34	820	±5%	0,25W	c.film	PM01435
R35,36	4k7	±5%	0,25W	c.film	PM01444
R37	100k	±5%	0,25W	c.film	PM01460
R38	1k	±5%	0,25W	c.film	PM01436
R39	470	±5%	0,25W	c.film	PM01432
R40	1k	±5%	0,25W	c.film	PM01436
R41	18k	±5%	0,25W	c.film	PM01451
R42	2Ω2	±5%	0,25W	c.film	PM01404
R43	220	±5%	0,25W	c.film	PM01428
R44	10	±5%	0,25W	c.film	PM01412
R45	220	±5%	0,25W	c.film	PM01428
R46	10	±5%	0,25W	c.film	PM01412
R47	3k9	±5%	0,25W	c.film	PM01443
R48–50	2k2	±5%	0,25W	c.film	PM01440
R51,52	10k	±5%	0,25W	c.film	PM01448
R53	1k	±5%	0,25W	c.film	PM01436
R54	10k	±5%	0,25W	c.film	PM01448
R55	4k7	±5%	0,25W	c.film	PM01444
R56	10k	±5%	0,25W	c.film	PM01448
R57	1k	±5%	0,25W	c.film	PM01436
R58	150k	±5%	0,25W	c.film	PM01462
R59	3k3	±5%	0,25W	c.film	PM01442
R60–62	4k7	±5%	0,25W	c.film	PM01444
R63	1k	±5%	0,25W	c.film	PM01436
R64,65	4k7	±5%	0,25W	c.film	PM01444
R66	1k	±5%	0,25W	c.film	PM01436
R67	10	±5%	0,25W	c.film	PM01412
R68	1k	±5%	0,25W	c.film	PM01436
R69	470	±5%	0,25W	c.film	PM01432
R70	4k7	±5%	0,25W	c.film	PM01444
R71–73	10k	±5%	0,25W	c.film	PM01448
R74	1k8	±5%	0,25W	c.film	PM01439
R75	10k	±5%	0,25W	c.film	PM01448
R76	1k8	±5%	0,25W	c.film	PM01439
R77,78	10k	±5%	0,25W	c.film	PM01448
R79	1k8	±5%	0,25W	c.film	PM01439
R80	1k	±5%	0,25W	c.film	PM01448
R81	1k	±5%	0,25W	c.film	PM01436
R82	10k	±5%	0,25W	c.film	PM01448
R83,84	4k7	±5%	0,25W	c.film	PM01444
R85	1k	±5%	0,25W	c.film	PM01436
R86–88	10k	±5%	0,25W	c.film	PM01448
R89	22k	±5%	0,25W	c.film	PM01452
R90	18k	±5%	0,25W	c.film	PM01451
RV1	2k2	±20%	Lin, Pot,	skel	PL99001
RV2	10k	±20%	Lin, Pot,	skel	PL01478
RV3	2k2	±20%	Lin, Pot,	skel	PL99001

CAPACITORS

C1	1	±20%	100V	elec	PS99455
C2,3	4μ7	±20%	100V	elec	PS99458
C4,5	330p	±2%	63V	cer plate	PN99777
C6	470p	±10%	63V	cer plate	PN99810
C7	1	±20%	100V	elec	PS99455
C8	10	±20%	63V	elec	PS99445
C9	150p	±2%	63V	cer plate	PN99773
C10	4μ7	±20%	100V	elec	PS99458
C11	100p	±2%	63V	cer plate	PN99771
C12	4μ7	±20%	100V	elec	PS99458
C13	100n	±10%	63V	poly	PQ99511
C14	270p	±2%	63V	cer plate	PN99776
C15	47	±20%	50V	elec	PS99439
C16,17	4μ7	±20%	100V	elec	PS99458
C18	10	±20%	63V	elec	PS99445
C19	4n7	±10%	63V	cer plate	PN99813
C20	1	±20%	100V	elec	PS99455

Cct. Ref	Description				Part No.	Remarks

CAPACITORS (Cont'd)

C21	10	±20%	63V	cer plate	PN99445	
C22	4μ7	±20%	100V	elec	PS99458	
C23,24	4n7	±10%	63V	cer plate	PN99813	
C25	10	±20%	63V	elec	PS99445	
C26,27	4n7	±10%	63V	cer plate	PN99813	
C28	470	±20%	63V	elec	PS99452	
C29,30	100n	±10%	63V	poly	PQ99511	
C31	22	±20%	63V	elec	PS99446	
C32	100n	±10%	63V	poly	PQ99511	
C33	470	±20%	63V	elec	PS99452	
C34	4n7	±10%	63V	cer plate	PN99813	
C35	1	±20%	100V	elec	PS99455	
C36	1n	±10%	63V	cer plate	PN99811	
C37	1	±20%	100V	elec	PS99455	
C38	4μ7	±20%	100V	elec	PS99458	
C39	10	±20%	63V	elec	PS99445	
C40–45	4n7	±10%	63V	cer plate	PN99813	
C46	47p	±2%	63V	cer plate	PN99767	
C47	1n	±10%	63V	cer plate	PN99811	

MISCELLANEOUS

LED 1–3	LED, red	FV05858	
LED4	LED, yellow	FV05930	
SKB	Socket, 7-way	FS44448	
SKC	Socket, 15-way	FS99081	
T1	Transformer	AL21246	
	Heatsink Assembly comprising:	AT14719	
	IC Audio Amp	FU08027	IC7
	Heatsink	BT37525	1/IC7
	Scr, pozi, pan, st, M3 x 6mm	QJ11901/X	1/IC7 – Heatsink
	Nut, hex, st, M3	QA11605/X	1/IC7 – Heatsink
	Washer, wavey, M3	QA13624	1/IC7 – Heatsink

FIXINGS

Scr, pozi, pan, st, M3 x 10 mm	QJ11903/X	2/SKC
Nut, hex, st, M3	QA11605/X	2/SKC

MICROPHONE/CONTROLLER
AT29703

Cable, 2 x 16/0,2 black	FC99308
Hood	FC99421
Housing, 2-way	FT10536
Microphone assembly (less connectors)	AT29704
Socket, contact (strip)	FT10683

AC SIGNALLING CONTROL AND FACILITY MODULES

INTRODUCTION

These modules enable the F490 series base stations to be controlled by an M80 series Controller, using AC signalling over a 2/4 wire 600Ω line.

The AC signalling system uses a 2970Hz continuous tone to key the transmitter and a 125 ms (approx.) burst of FSK data to provide additional facilities. (ie: Squelch Defeat, Talkthrough etc.). The FSK data is decoded by the facility module.

The control module will provide only the transmit/receive function, where the additional facilities are required both modules must be fitted.

AC SIGNALLING CONTROL MODULE AT28829/– (FOR USE WITH PRIMARY OPTIONS 31–34,37)

LINK DETAILS

The Link details for this board are given in Table 1.

Link	In/Out	Description
LK1 (–20 db gain)	IN	Reduces gain of TX600Ω line input amplifier for line signals greater than –20dbm
LK2 (EHS INTERCOM)	IN	Provides intercom between EHS and Controller. Transmitter cannot be keyed by handset when LK2 is IN
LK3 (SQ DEF)	IN	Enables Rx squelch to be opened for test purposes
LK4 (TT TEST)	IN	Enables talkthrough to be selected for test purposes
LK5 (TONE SQ/TT)	A TO B IN A TO C IN (VIA DIODE)	Connects tone decoder output to squelch logic circuit Connects tone decoder output to talkthrough logic circuit (See Talkthrough Description)
LK6 (DEL OFF)		Talkthrough Mode Only
	OUT	Transmitter remains on for two seconds (approx.) after Rx squelch closes
	IN	Talkthrough delay removed
LK7 (TD/SD)	OUT	'Lo' on PLG pin 4 provides tone defeat
	IN	'Lo' on PLG pin 4 provides squelch defeat
LK8 (PRE-EMP)	IN	Provides 10 db of high frequency lift to compensate for lines which have a poor frequency response; this is especially important as the 2970 Hz key tone is at the top end of the audio range
LK9 (DUPLEX)	OUT	Rx keyed off when TX selected
	IN	Rx on continuously
LK10 (TT LATCH)		3/5 Tone Selected TT Systems Only
	IN	Latches equipment in talkthrough until the Rx squelch closes and the transmitter is turned off

Table 1

TECHNICAL DESCRIPTION

Tx Audio

The audio input is fed in on PLA, across pins 1 and 3 (2 wire) or pins 4 and 5 (4 wire); T1,2 provide matching to the amplifier IC1(a). LK1 is linked in when 20 db attenuation is required. R44,46,47 and C22 form an electronic hybrid which is balanced by RV8,9 to cancel the Rx audio signal from IC6(b) preventing it from being fed to the Tx audio line; the Tx audio sensitivity is set by RV2.

The gyrator notch filter IC2 removes the 2970 Hz tone from the audio signal and feeds it to the tone detector, via amplifier IC4(a).

IC1(b) amplifies the Tx audio and feeds it in two directions:

(i) To the facility module (if fitted), via PLG pin 7.
(ii) To the TX/TT gate IC9(a)

Gyrator notch filter IC3 provides further rejection of the 2970 Hz tone; IC4(b) amplifies the audio and applies it to the transmitter board on PLE.

Rx Audio

The Rx audio output from the receiver board on PLF is applied, via C27 to the squelch gate IC9(c) and then amplified in IC8(b).

The amplifier output is routed in two directions:

(i) To the notch filter IC7
(ii) Via RV4 (T/T LEVEL) to the TX/TT gate

NOTCH 3 removes the 2970 Hz component from the Rx audio signal as an additional precaution against breakthrough to the Tx audio line.

RV3 (Rx 600Ω O/P LEVEL) sets the audio input level to the push pull amplifier IC6 whose output is fed across T1 to the 600Ω line on PLA pins 1 and 3.

Tx Key

The 2970 Hz tone filtered from the Tx audio signal by IC2 is amplified by IC4(a), filtered again by gyrator notch IC5 and detected by D4 and D5. TR9 is made to conduct feeding a 'lo' to IC11(b) (a NAND SCHMITT gate). The resultant 'hi' opens the TX/TT gate and is inverted by IC10(d) producing a 'lo' which is routed as follows:

(i) To IC11 pin 2 to inhibit talkthrough
(ii) To turn on TR8 which lights LED2 (TX) and supplies the TX + 10V line, thus establishing the transmit condition.
(iii) Inverted by IC10(e) to turn off TR4 thus inhibiting the receiver.
(iv) To turn on TR1 which supplies + 13,5V to the antenna changeover relay.

Squelch

A squelch 'lo' from the receiver board switches on TR5 which lights LED3 (SQ), opens the squelch gate IC9(c) and enables IC11 pin 12 (See Talkthrough)

Engineers Handset

The engineers handset (EHS) is connected to SKB. Immediately the EHS is connected the juction D10/D11 is grounded thus inhibiting talkthrough and the transmit function. Operation of the PTT switch grounds IC11 pin 5 producing a 'hi' at pin 4 which opens the TX/TT gate and is inverted by IC10(d) producing a 'lo' which is routed as previously described under Tx key.

Audio from the EHS microphone is fed direct to the transmitter board on PLE.

Rx audio (via R83) and Tx audio (via R82) are fed through the EHS amplifier IC8(a) to the EHS earpiece at a level set by RV1.

Intercom

With LK2 IN the intercom facility allows an engineer to talk to the Controller using the EHS.

When a 2970 Hz key signal is received from the Controller the TX/TT gate feeds audio from the line, via R82, to the EHS amplifier then to the earpiece at a level set by RV1. Operation of the PTT switch applies a 'lo', via LK2 to open the intercom gate TR2. Audio from the EHS microphone is applied directly to the transmitter board, the audio reappears on the AF RETURN line and is fed, via the intercom gate, to the Rx audio path on the input of IC8(b) and thence to the 600Ω line. D12 prevents the transmitter from being keyed by the PTT switch when intercom is selected.

Note: The following facilities can only be selected from the Controller when the facility module is fitted; the interconnection is made on PLG.

Tone Defeat

A 'lo' on PLG pin 4 is inverted by IC10(a) producing a 'hi' which turns off TR6 allowing a squelch input from the Rx board to switch on TR5. (ie: A Tone Valid input is simulated).

Squelch Defeat

A 'lo' on PLG pin 4 is fed, via LK7, causing TR5 to conduct thus opening the squelch. LK3 enables the squelch to be opened for test purposes.

Talkthrough

A T/T 'lo' on PLG pin 5 is inverted by IC10(f) and fed to IC11 pin 1; when IC11 pin 2 is 'hi' (ie: No keying tone is present) the output on pin 3 is 'lo'. TR7 is switched on causing LED1 (T/T) to light and a 'hi' to be fed to IC11 pin 13.

With IC11 pin 12 enabled by the squelch a 'lo' is produced at pin 11 which is double inverted by IC10(b) and IC10(c) causing TR8 to conduct, so keying the transmitter and providing talkthrough.

LK4 (TT TEST) enables talkthrough to be selected for test purposes; LK4 MUST NOT be used to provide permanent talkthrough. Continuous talkthrough may be selected by linking PLG pins 5 and 8.

Talkthrough may also be initiated by the tone option module (if fitted) by connecting a diode across pins A and C of LK5. The way in which the diode is connected and the state of the T/T switching input at PLG pin 5 determine the mode of talkthrough selected.

LK5	PLG pin 5	Talkthrough Mode
A—◁|—C	Hi	No Talkthrough
	Lo	Tone Mobiles Only
A—▷|—C	Hi	Tone Mobiles Only
	Lo	All Mobiles

LK5 A–B:	A TONE VALID 'hi' is applied to TR5 causing it to conduct and open the squelch.
LK5 A—▷|—C:	A TONE VALID 'hi' is fed to R92/R93 to initiate talkthrough for tone mobiles only when the talkthrough switch is off.
LK5 A—◁|—C:	The presence of an invalid tone will apply a 'lo' to R92/R93 thus inhibiting talkthrough. A TONE VALID 'hi' will effectively remove the 'lo' from R92/R93 allowing talkthrough to occur.

When made, LK10 (T/T LATCH) feeds the Tx 10V line to IC11(a) keeping the equipment in talkthrough until the squelch closes and TR8 cuts off. LK10 is only used with 3/5 tone controlled talkthrough systems.

PARTS LIST
AC SIGNALLING CONTROL PCB
AT28829/–

/01 2 Wire Simplex
/02 4 Wire Duplex

Cct. Ref	Description	Part No.	Remarks
SEMICONDUCTORS & ICS			
IC1–8	IC Dual Op Amp	FU99092	
IC9	IC 4053	FU99142	
IC10	IC40106	FU99126	
IC11	IC4093 MOS	FU99103	
TR1	Transistor BC327	FV05975	
TR2	Transistor BC557B	FV05977	
TR3	Transistor BF245B	FV05900	
TR4	Transistor BC327	FV05975	
TR5	Transistor BC559C	FV05978	
TR6,7	Transistor BC557B	FV05977	
TR8	Transistor BC327	FV05975	
TR9	Transistor BC547B	FV05891	
D1	Zener Diode C5V6	FV05867	
D2–5	Diode 1N4148	FV05808	
D6	Zener Diode 6V8	FV05868	
D7–14	Diode 1N4148	FV05808	

RESISTORS

R1	562	±1%	0,25W	m.film	PL99803	/02
R2	10k	±5%	0,25W	c.film	PM01448	/02
R3	12k	±5%	0,25W	c.film	PM01449	
R4	100k	±5%	0,25W	c.film	PM01460	
R5	6k8	±5%	0,25W	c.film	PM01446	
R6	1k8	±5%	0,25W	c.film	PM01439	
R7	3k3	±5%	0,25W	c.film	PM01442	
R8–10	10k	±1%	0,25W	m.film	PL99098	
R11	10k	±5%	0,25W	c.film	PM01448	
R12	13k	±1%	0,25W	m.film	PL99099	SOT
R13	1k5	±5%	0,25W	c.film	PM01438	
R14	8k2	±5%	0,25W	c.film	PM01447	
R15	1k	±5%	0,25W	c.film	PM01436	
R16–18	10k	±1%	0,25W	m.film	PL99098	
R19	13k	±1%	0,25W	m.film	PL99099	SOT
R20,21						Not Used
R22	100k	±5%	0,25W	c.film	PM01460	
R23	3k9	±5%	0,25W	c.film	PM01443	
R24,25						Not Used
R26,27	10k	±1%	0,25W	m.film	PL99098	
R28	10k5	±1%	0,25W	m.film	PL45281	
R29	13k	±1%	0,25W	m.film	PL99099	SOT
R30	5k6	±5%	0,25W	c.film	PM01445	
R31,32	39k	±5%	0,25W	c.film	PM01445	
R33	5k6	±5%	0,25W	c.film	PM01445	
R34	8k2	±5%	0,25W	c.film	PM01447	
R35						Not Used
R36	10k	±5%	0,25W	c.film	PM01448	
R37	4k7	±5%	0,25W	c.film	PM01444	
R38	1k	±5%	0,25W	c.film	PM01436	
R39,40	4k7	±5%	0,25W	c.film	PM01444	
R41	10k	±5%	0,25W	c.film	PM01448	
R42	22k	±5%	0,25W	c.film	PM01452	
R43	390	±5%	0,25W	c.film	PM01431	
R44	10k	±5%	0,25W	c.film	PM01448	/01
R45	562	±1%	0,25W	m.film	PL99083	
R46	33k	±5%	0,25W	c.film	PM01454	/01
R47	15k	±5%	0,25W	c.film	PM01450	/01
R48	68k	±5%	0,25W	c.film	PM01458	
R49	10k	±5%	0,25W	c.film	PM01448	

Cct. Ref	Description				Part No.	Remarks
RESISTORS (Cont'd.)						
R50						Not Used
R51–53	10k	±5%	0,25W	c.film	PM01448	
R54	10k	±1%	0,25W	m.film	PL99098	
R55	10k	±5%	0,25W	c.film	PM01448	
R56,57	10k	±1%	0,25W	m.film	PL99098	
R58	13k	±1%	0,25W	m.film	PL99099	
R59,60						Not Used
R61	4k7	±5%	0,25W	c.film	PM01444	
R62	39k	±5%	0,25W	c.film	PM01455	
R63	4k7	±5%	0,25W	c.film	PM01444	
R64	10k	±5%	0,25W	c.film	PM01448	
R65						Not Used
R66	47k	±5%	0,25W	c.film	PM01456	
R67	4k7	±5%	0,25W	c.film	PM01444	
R68	10k	±5%	0,25W	c.film	PM01448	
R69	1k	±5%	0,25W	c.film	PM01436	
R70						Not Used
R71,72	47k	±5%	0,25W	c.film	PM01456	
R73,74	10k	±5%	0,25W	c.film	PM01448	
R75						Not Used
R76,77	10k	±5%	0,25W	c.film	PM01448	
R78	22k	±5%	0,25W	c.film	PM01452	
R79	10k	±5%	0,25W	c.film	PM01448	
R80	330	±5%	0,25W	c.film	PM01430	
R81	100k	±5%	0,25W	c.film	PM01460	
R82	330k	±5%	0,25W	c.film	PM01466	
R83	27k	±5%	0,25W	c.film	PM01453	
R84	10k	±5%	0,25W	c.film	PM01448	
R85	100	±5%	0,25W	c.film	PM01424	
R86,87	10k	±5%	0,25W	c.film	PM01448	
R88						Not Used
R89	10k	±5%	0,25W	c.film	PM01448	
R90						Not Used
R91–99	10k	±5%	0,25W	c.film	PM01448	
R100						Not Used
R101,102	10k	±5%	0,25W	c.film	PM01448	
R103	1k	±5%	0,25W	c.film	PM01436	
R104	10k	±5%	0,25W	c.film	PM01448	
R105						Not Used
R106	3k3	±5%	0,25W	c.film	PM01442	
R107	150k	±5%	0,25W	c.film	PM01462	
R108	1k	±5%	0,25W	c.film	PM01436	
R109	4k7	±5%	0,25W	c.film	PM01444	
R110						Not Used
R111	4k7	±5%	0,25W	c.film	PM01444	
R112	1k	±5%	0,25W	c.film	PM01436	
RV1	2k2	±20%	Lin, Pot,	skel	PL99001	
RV2	10k	±20%	Lin, Pot,	skel	PL01478	
RV3	4k7	±20%	Lin, Pot,	skel	PL01486	
RV4	10k	±20%	Lin, Pot,	skel	PL01478	
RV5–7	1k	±20%	Lin, Pot,	skel	**PL99581**	
RV8	10k	±20%	Lin, Pot,	skel	PL01478	/01
RV9	4k7	±20%	Lin, Pot,	skel	PL01486	/01
RV10	1k	±20%	Lin, Pot,	skel	PL99687	

CAPACITORS

C1	47p	±2%	63V	cer plate	PN99767
C2	100p	±2%	63V	cer plate	PN99792
C3	22n	±10%	63V	pes	PQ99515
C4	150n	±10%	50V	pes	PQ32333
C5–9	4n7	±5%	25V	cer plate	PN99731
C10	100n	±10%	63V	poly	PQ99511
C11	4n7	±5%	25V	cer plate	PN99731
C12,13	2μ2	±20%	100V	elec	PS99456
C14	4μ7	±20%	63V	elec	PS99444

Cct. Ref	Description				Part No.	Remarks
CAPACITORS (Cont'd)						
C15						Not Used
C16,17	2μ2	±20%	100V	elec	PS99456	
C18	4μ7	±20%	63V	elec	PS99444	
C19	470	±20%	10V	elec	PS99405	
C20	22n	±10%	63V	pes	PQ99515	/02
C21	22n	±10%	63V	pes	PQ99515	
C22	4n7	±5%	25V	cer plate	PN99731	/01
C23	330p	±2%	63V	cer plate	PN99777	
C24	4n7	±5%	25V	cer plate	PN99731	
C25						Not used
C26	4n7	±5%	25V	cer plate	PN99731	
C27	2μ2	±20%	100V	elec	PS99456	
C28	4n7	±10%	63V	cer plate	PN99813	
C29	4n7	±20%		cer plate	PN99919	
C30	10	±20%	50V	elec	PS99436	
C31	4n7	±10%	63V	cer plate	PN99813	
C32	4μ7	±20%	63V	elec	PS99444	
C33	270p	±2%	63V	cer plate	PN99776	
C34	10	±20%	50V	elec	PS99436	
C35						Not Used
C36	10	±20%	50V	elec	PS99436	

ELECTRICAL ITEMS

LED1,2	LED, red	FV05858	
LED3	LED, yellow	FV05930	
SKA	Socket, 5-way	FS44449	
SKB	Socket, 7-way	FS44448	
T1	Transformer	FT05323	
T2	Transformer	FT05323	/02

AC SIGNALLING FACILITY MODULE AT28830/– [6]
(FOR USE WITH PRIMARY OPTIONS 33,34,37)

INTRODUCTION

The function of this module is to decode FSK tone signalling bursts from an M80 series controller and provide logic outputs to the control module for selection of 'Talkthrough', 'Squelch Defeat' or 'Tx Inhibit'.

The FSK signalling format is illustrated in the diagram below which shows a single burst of tone; it contains two data words each comprising a start bit, eight data bits, a parity bit and a stop bit. The first four data bits, d_0-d_3, provide individual control of the base station facilities and d_5 is used as a flag to indicate that bits d_0-d_3 indicate channel change information. The remaining data bits d_4, d_6 and d_7 are used as check bits within the module and will be 'low' when a data word is intended to control base station facilities. Repeating the word guards against the possibility of noise or speech being decoded as an FSK command.

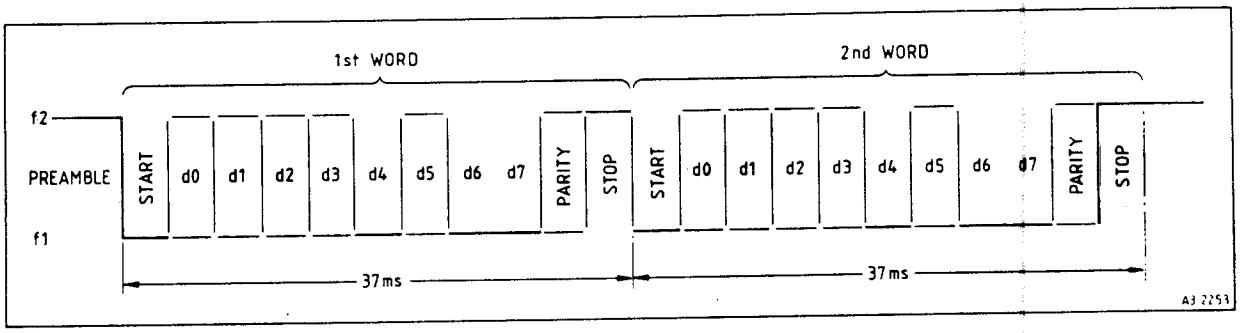

LINK DETAILS

Link	Position	Function
LK1 LK2	}	Not Used
LK3	IN OUT	Prevents 'Key Detect' resetting Line Fail Counter Allows 'Key Detect' to reset Line Fail Counter
LK4		Not Used
LK5	A–B	Provides simple Line Fail Talkthrough

TECHNICAL DESCRIPTION

FSK Demodulation

Line audio from the control module, applied to PLG pin 7, is fed via an active bandpass filter, IC1–IC2, and buffer amplifier IC3(b) to pin 2 of the FSK demodulator IC4. The decoded information, in the form of a digital pulse train, appears at IC4 pin 7. If the input frequency is within the lock range of IC4, pin 6 is taken 'high' allowing the data on pin 7 to be passed to the 'Serial Data Input' pin of the UART (IC14 pin 20) via inverter IC20(b). Should the input frequency be outside the lock range of IC4, pin 6 is taken 'low', preventing random data from being fed to the UART.

Serial–to–Parallel Conversion

The receive half of the 'Universal Asynchronous Receiver/Transmitter' (UART) converts the serial data input on pin 20 to parallel data outputs (d_0–d_7) on pins 5–12. The arrival of data is flagged by 'Data Available' (pin 19) going 'high'; this latched output remains 'high' until 'Data Available Reset' (pin 18) goes 'low'. The reset is from IC15(b) which simultaneously latches the data into either IC16 or IC17.

The UART also carries out checks for 'framing error' (word of wrong length) and 'parity error' (number of high bits in word content does not match with parity check bit) on each incoming word, producing a 'high' (error indication) at pin 14 or 13 as appropriate. These outputs, gated with DAR and bits d_4 d_6 and d_7, are used in word-validation checks (see below).

Word Validation & Data Comparison

A correct FSK burst consists of two identical data words.

On arrival of the first word, data bits d_0-d_3 are latched into IC16 and stored as I/P B to comparator IC18. If the word is valid all inputs to IC21 are 'low'; the resulting 'high' on pin 13, inverted in IC19, clocks IC15a, taking pin 1 'high'; this inhibits IC16 from latching in the second word and, via R53, primes the comparator.

On arrival of the second word, bits d0-3_3 at I/P A to IC18 are compared with those of the first word stored at I/P B. If these are identical and the word-validity check correct, pins 12 and 13 of IC18 will go 'low'. If d_5 is also 'low' then pins 9 and 10 of output latch IC17 will be 'low' and the data stored at outputs Q_{1-4}.

Logic Outputs

The outputs on IC17 pins 3-6 are fed to the control module via open collector output level converters (IC11) and pins of PLG. Gating in IC20 inhibits 'Talkthrough' when 'Squelch Defeat' is selected.

Clock Generator

Clock generator IC5 employs a 307 kHz ceramic resonator and provides an output to the line-fail counter IC6 and clock inputs to IC14-17.

Line Fail Counter

If not inhibited by T/T ('high' to IC7 pin 9 from IC7 pin 4), counter IC6 is clocked from the Q_{14} output of IC5 ; it is reset whenever a valid data word is received or, unless LK3 is linked, when keytone is detected. If neither occurs in a period of 54 seconds, the counter stops, pin 15 goes 'high' and LED 2 is lit. If LK5 is linked A-B, the Base Station is switched to T/T and the output data latch IC17 is reset.

PARTS LIST

AC SIGNALLING FACILITY PCB [6]

AT28830/01

Cct. Ref	Description	Part No	Remarks
SEMICONDUCTORS & ICS			
IC1–3	IC Dual Op Amp	FU99092	
IC4	IC FSK Demod/Tone Decoder	FU03751	
IC5	IC 4060 MOS	FU99121	
IC6	IC 4020 MOS	FU99067	
IC7	IC 4071 MOS	FU99093	
IC8–10			Not Used
IC11	IC Quad Comparator	FU99120	
IC12,13			Not Used
IC14	IC UART	FU09159	
IC15	IC 4027 MOS	FU99071	
IC16,17	IC 4076 MOS	FU99140	
IC18	IC COS/MOS Mag Comparator	FU09166	
IC19	IC 4093 MOS	FU99103	
IC20	IC 4011 MOS	FU99062	
IC21	IC 4078 MOS	FU99130	
TR1	Transistor BC547B	FV05891	
D1–3			Not Used
D4	Diode 1N4148	FV05808	
D5	Diode GP1N4148	FV05808	

RESISTORS

R1	4k64	±1%	0,25W	m.film	PL99094	
R2–4	8k25	±1%	0,25W	m.film	PL99097	
R5	6k81	±1%	0,25W	m.film	PL99096	
R6	21k5	±1%	0,25W	m.film	PL99102	
R7–9	8k25	±1%	0,25W	m.film	PL99097	
R10	6k81	±1%	0,25W	m.film	PL99096	
R11	38k3	±1%	0,25W	m.film	PL99105	
R12	10k	±5%	0,25W	c.film	PM01448	
R13	1k	±5%	0,25W	c.film	PM01436	
R14	150k	±5%	0,25W	c.film	PM01462	
R15	82k5	±1%	0,25W	m.film	PL99109	
R16	1M	±5%	0,25W	c.film	PM01472	
R17,18	100k	±5%	0,25W	c.film	PM01460	
R19	560k	±5%	0,25W	c.film	PM01469	
R20,21	22k	±5%	0,25W	c.film	PM01452	
R22	1M	±5%	0,25W	c.film	PM01472	
R23,24	22k	±5%	0,25W	c.film	PM01452	
R25						Not Used
R26,27	10k	±5%	0,25W	c.film	PM01448	
R28,29						Not Used
R30,31	10k	±5%	0,25W	c.film	PM01448	
R32						Not Used
R33	10k	±5%	0,25W	c.film	PM01448	
R34–37						Not Used
R38	10k	±5%	0,25W	c.film	PM01448	
R39	100k	±5%	0,25W	c.film	PM01460	
R40–42	10k	±5%	0,25W	c.film	PM01448	
R43	1k	±5%	0,25W	c.film	PM01436	
R44	10k	±5%	0,25W	c.film	PM01448	
R53	22k	±5%	0,25W	c.film	PM01452	
RV1	**20K**	±20%	Lin, Pot,	encl	**PL99583**	

CAPACITORS

C1	2μ2	±20%	100v	elec	PS99456
C2–5	10n	±2,5%	63V	poly	PQ99621
C6	100n	±10%	63V	poly	PQ99511
C7	4n7	±5%	25V	cer plate	PN99731
C8–10	100n	±10%	63V	poly	PQ99511
C11.12	10n	±10%	63V	poly	PQ99510

Cct. Ref	Description				Part No.	Remarks
CAPACITORS (Cont'd)						
C13	470p	±2%	63V	cer plate	PN99810	
C14	220p	±2%	63V	cer plate	PN99796	
C15–17						Not Used
C18	33	±20%	35V	elec	PS99429	
C19	1	±20%	100V	elec	PS99455	
C20	33	±20%	35V	elec	PS99429	
C21						Not Used
C22	10	±20%	50v	elec	PS99436	
C23,24	100n	±10%	63V	poly	PQ99511	
ELECTRICAL ITEMS						
CR1	Crystal Resonator				FC03199	
LED1,2	Led, red				FV05858	
	Lead assembly				AT70039	Facility module–Control module

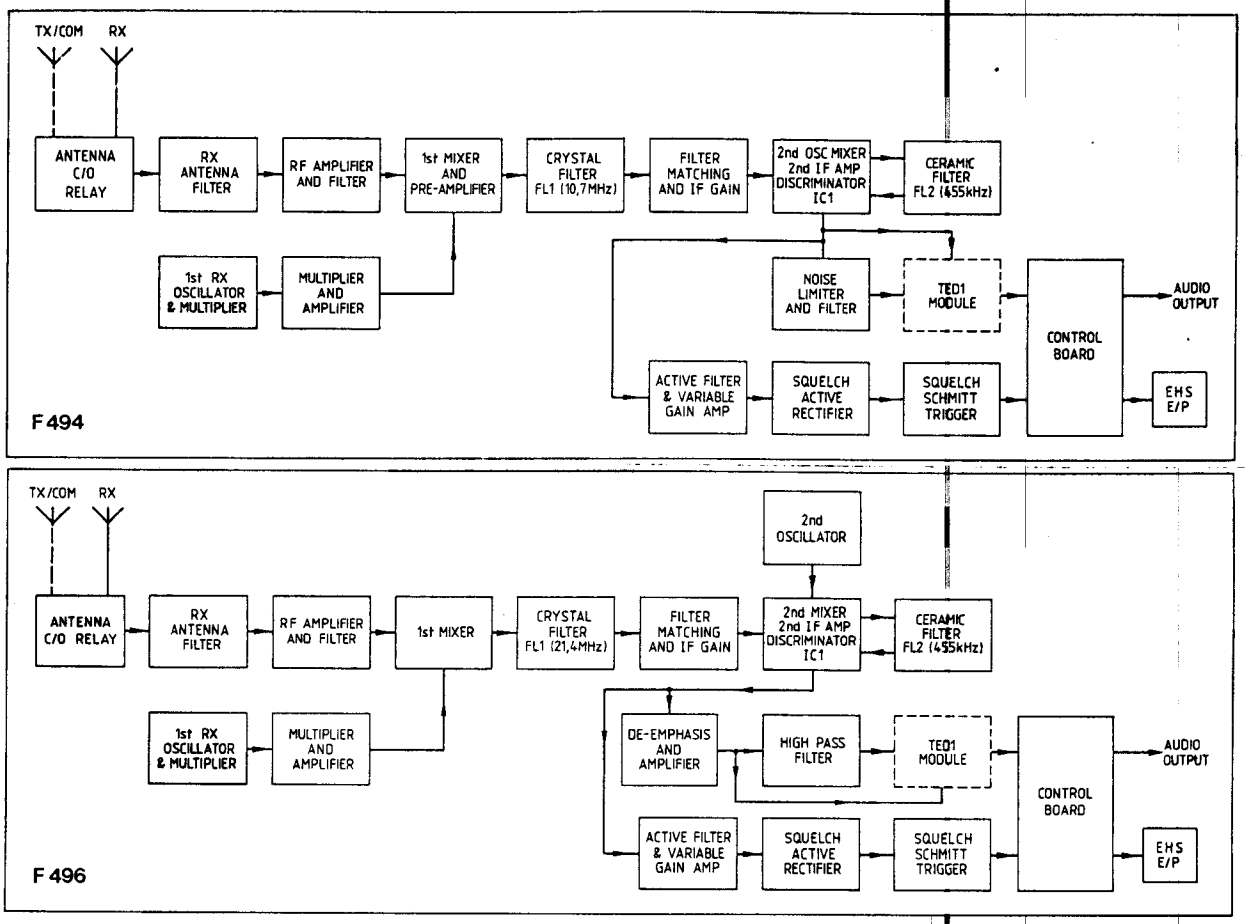

Fig 3.1 Receiver Block Diagram

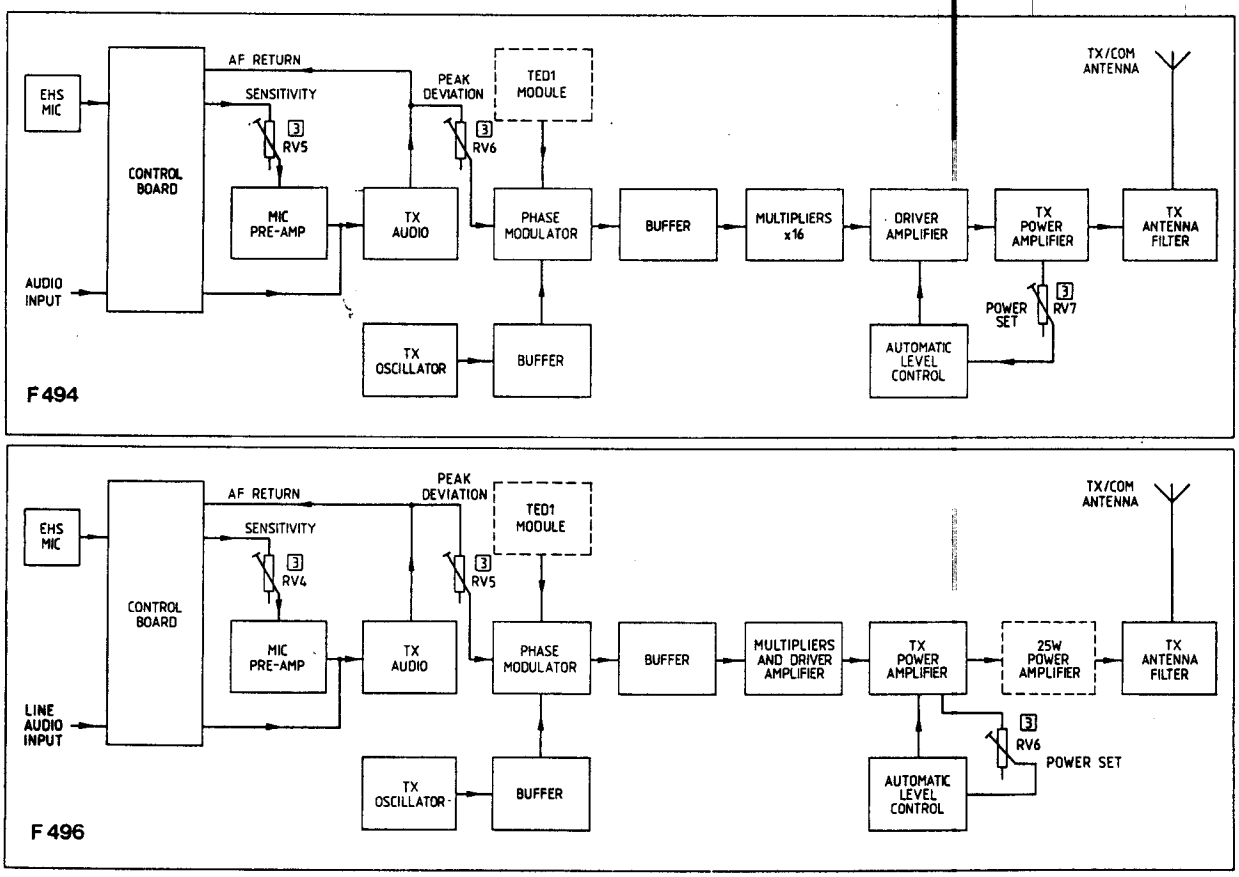

Fig 3.2 Transmitter Block Diagram

SECTION 3

TECHNICAL DESCRIPTION

CIRCUIT SUMMARY

Regulator

The base station is equipped with one of three regulator boards allowing it to be operated from the following supplies.

(i) AC with +24V DC standby

(ii) AC with +12V DC standby

(iii) +24V DC only

In the event of an AC supply failure, changeover to the standby supply is achieved automatically through RLA.

The regulator provides a +13,5V DC voltage to the receiver front end (F496 only) and mixer, the transmitter PA stages and the control board. It also drives a 10V regulator, situated on the receiver board, which provides power to the remaining circuits.

Receiver

Received signals are routed from the antenna through the Rx antenna filter to the two section RF filter and amplifier; the three section RF filter provides further selectivity.

The Rx oscillator frequency is multiplied and amplified then mixed with the RF signal to produce a 1st IF of 10,7 MHz (F494) or 21,4 MHz (F496) which is filtered by FL1. The output is passed through an emitter follower buffer stage and a common emitter voltage amplifier to IC1. The output from the crystal controlled 2nd oscillator is applied to the 2nd mixer where it is combined with the 1st IF to produce a 2nd IF of 455 kHz. The 2nd IF is passed, via the 2nd IF amplifier and ceramic filter FL2, to the discriminator.

Audio from the discriminator is routed as follows:

(i) To a noise limiter (F494), de-emphasis network and, via the TED1 module (if fitted), high-pass filter, to the control board.

(ii) To the noise operated squelch detection circuit which provides an output to the squelch gate on the control board

Transmitter

The audio input to the control board is fed in as Tx line audio or is derived from the engineers handset. The latter is applied, via the sensitivity control, to the mic pre-amplifier on the transmitter board while the line audio is fed via the 600Ω amplifier on the control board to the pre-emphasis amplifier in the Tx audio circuits. The AF signal is clipped and de-emphasised then filtered and amplified and passed through the peak deviation control to the phase modulator.

The frequency generated by the Tx oscillator is phase modulated by the audio; buffer stages isolate the phase modulator.

The modulator output is multiplied by a series of doubler stages then passed to the driver amplifier and PA stages. The PA output is applied to the Tx antenna filter then to the TX/COM antenna, in the F496 an optional 25W PA module may be fitted prior to the antenna filter.

An automatic level control (ALC) circuit is incorporated which maintains the output at a substantially constant level compensating for fluctuations in voltage and temperature.

The F494 power output is normally 25W into a 50Ω load which may be continuously adjusted down to 6W using the POWER SET control.

The F496 power output is nominally 6W into a 50Ω load which may be continuously adjusted down to 1W.The optional power amplifier increases the output to 25W which may be continuously adjusted down to 10W.

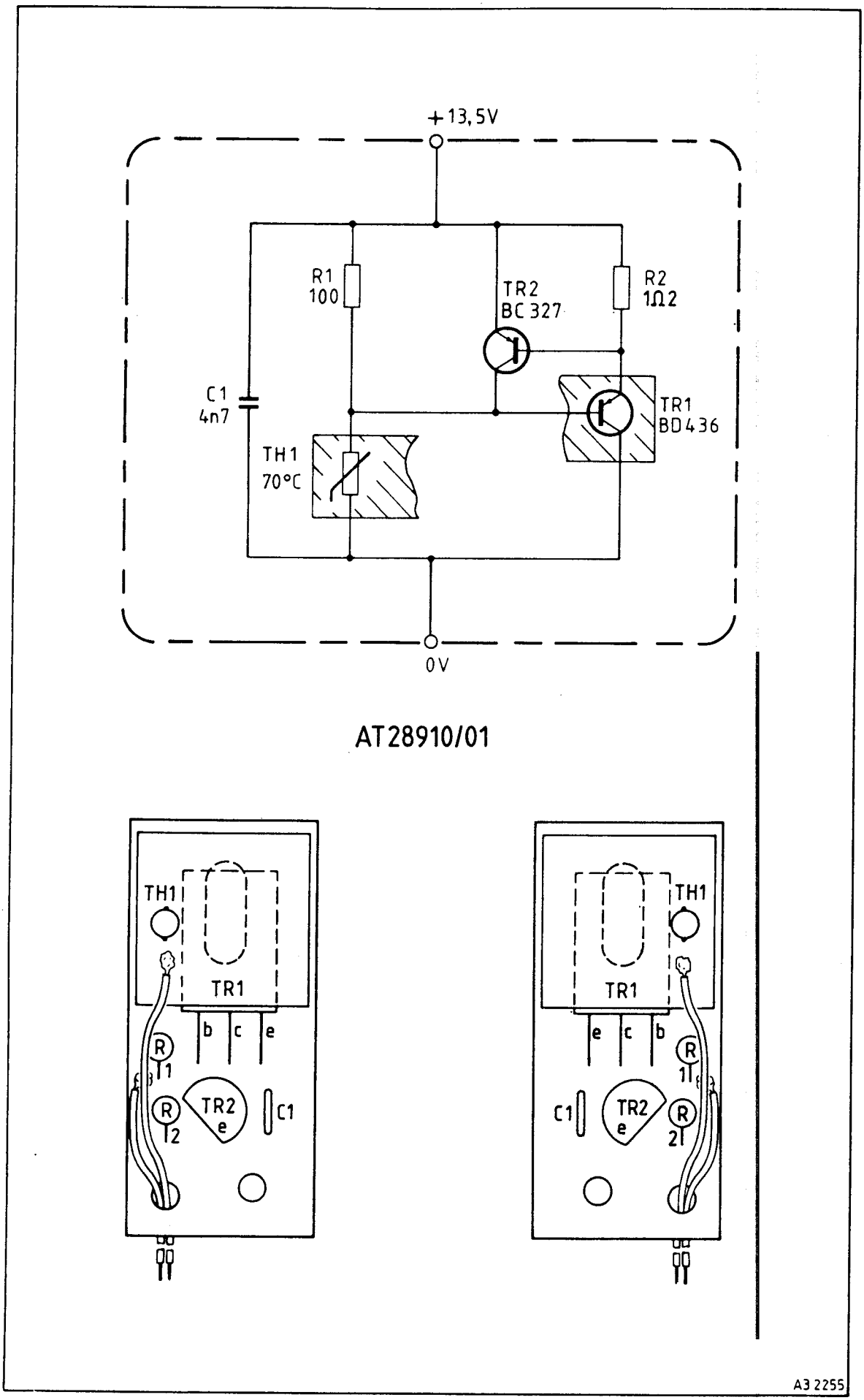

Fig 3.3 Crystal Oven Assembly Circuit and Layout Diagrams

DETAILED CIRCUIT DESCRIPTION

Regulator [1]

AC with 24V DC standby

The AC input is applied, via [0] FS1, to the step-down transformer [0] T1. The secondary voltage, protected by FS2, is rectified in [0] D1 and smoothed by [0] C1; R9 is the bleed resistor for [0] C1.

Rectification provided by D2,3 is smoothed by C6 to produce a voltage which lights LED2 (ON AC) and energises RLA/1; TR2 conducts to hold off LED1 (ON DC). The contact of RLA connects the voltage from [0] C1 to the regulator [0] IC1.

The low-current regulator provides an output which is set by RV1 (SET VOLTS). The current drawn through [0] IC1 develops a voltage across R1,2, when sufficiently high this voltage cuts on the current amplifier [0] TR1,2 enabling up to 7A to be drawn at the output. Current sharing is achieved by R3,4 while C3,4 provide output decoupling.

Thermistor [0] TH1 provides over-temperature protection. At approx 80°C the increased voltage drop across [0] TH1 causes TR1 to conduct pulling pin 2 of the control board low causing thermal shutdown. (i.e. the transmitter disabled).

The DC standby supply is connected to [0] PLD and protected by FS1; D1 protects the circuit from reverse polarity. In the absence of an AC supply RLA is de-energised and TR2 cut off, the DC input is fed through RLA1 to the regulator; LED1 (ON DC) lights, LED2 (ON AC) is extinguished.

AC with 12V DC standby

This is similar to the 24V DC standby version with the exception of RLA1 being positioned on the output of the low current regulator.

24V DC Only

The DC input on [0] PLD is protected by FS1 and D1, and is indicated by LED1 (ON DC). Operation of the low current regulator and over temperature circuit is similar to that on the 24V DC standby version.

Receiver [2] (F494)

RF signals at the antenna are routed, via the Rx antenna filter L43–46, C187–195 to an RF filter L1,2, C1–3, which reduces intermodulation interference. A variable-gain common-gate RF amplifier follows, whose gain, preset by RV1, can be set for the best sensitivity or the best intermodulation. A further stage of filtering L3–5 provides image channel rejection.

The 1st receiver oscillator, a modified Colpitts type, employs a series resonant third overtone crystal XL1–6 whose exact frequency is set by trimmers L9–14. Crystal stability at low temperatures is achieved by the use of self-regulating resistors R42–47 known as pozistors, these are positioned adjacent to the crystals and kept in thermal contact with them by means of an insulating sleeve.

L15 is tuned to the third harmonic (A and B bands) or second harmonic (E band) of the crystal frequency which is amplified by TR12 and filtered by L16,17 to provide the injection frequency. The signal frequency is added to the injection frequency across L17 and applied to the mixer TR2 with L6,7 tuned to the 1st IF at 10,7 MHz. The mixer gain is kept low to obtain a good intermodulation figure. The pre-amplifier TR3, tuned by L7, has its output filtered in FL1, providing adjacent channel rejection.

TR4 is an emitter follower which matches the crystal filter to 1st IF amplifier TR5. The 2nd oscillator, 2nd mixer, 2nd IF amplifier, and discriminator are all incorporated in IC1 whose external circuitry includes the oscillator crystal XL13, a 455 kHz ceramic filter FL2, which reduces noise bandwidth and improves adjacent channel rejection, and the discriminator tuned circuit L8, C36,37.

The audio output from the discriminator is fed to the variable gain stage TR6, whose gain is set by RV2, providing a steady audio output to the tone options and control board. Clipper D3,4 form part of the noise limiter the de-emphasis provided by R27, C42, 44; TR7 forms an active high pass filter to reduce low frequency audio noise.

TR7 output is routed to the control board, via the tone option (if fitted).

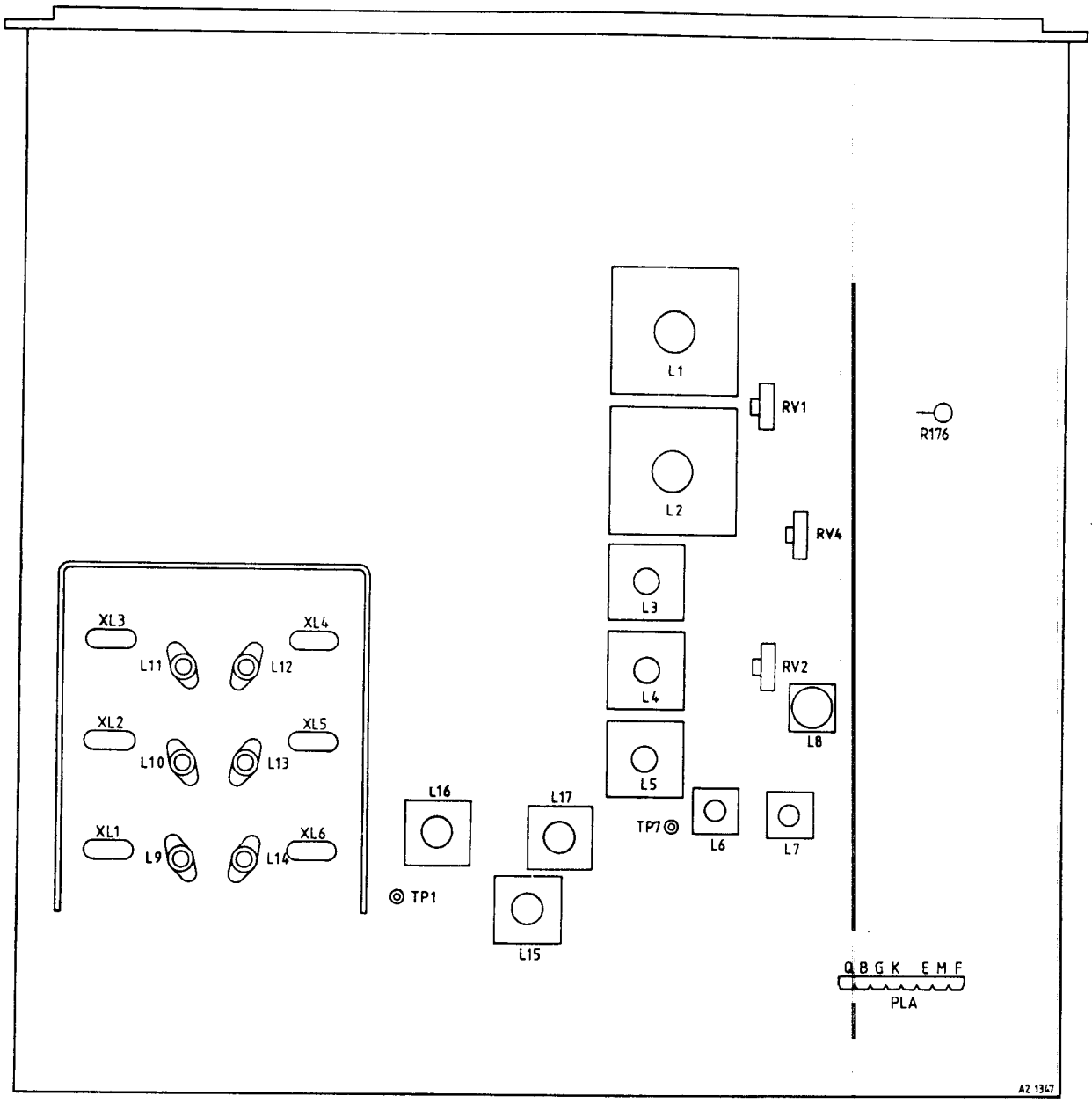

Fig 4.4 F494 Receiver Alignment Diagram

5. Rx Alignment

(a) Connect the test equipment as shown in Fig. 4.3

(b) Select the channel frequency closest to the centre frequency of the band covered. Set the RF signal generator to this frequency using the frequency counter. Disconnect the counter.

(c) Set cores of coil [2] L15, 16, 17 flush with the top of their formers

(d) Carry out the appropriate alignment as follows:

(i) F494 EQUIPMENTS:–

STEP	TEST EQUIPMENT	TEST POINT	TUNE	ADJUSTMENT
A	AVO (2,5V DC)	[2] TP1	[2] L15 [2] L16	Adjust for maximum Adjust for minimum
B	AVO (10V DC)	[2] TP7	[2] L16, 17 [2] L15, 16, 17	Adjust for maximum Adjust for maximum
C	Set [2] RV1,2,4 fully counter-clockwise and [5] RV1 fully clockwise. Set RF signal generator output to 100mV unmodulated			
D	SINAD Meter	[0] SKB pin 4	[2] L1-7	Tune in sequence for best quieting, reducing signal generator output, as necessary
E	Marker Oscillator	—	—	If necessary, adjust crystal oscillator for zero beat
F	Modulate RF input signal 1 kHz at 60% peak deviation, output 1mV			
G	AF Voltmeter	[0] SKB pin 4	[2] L8	Tune for maximum
H	Oscilloscope	[0] SKB pin 4	[2] L7	Tune for minimum distortion
J	AF Voltmeter	[2] PLA pin E	[2] RV2	Adjust for 100±5mV RMS
K	Reduce RF input to 0,3 μV modulated as in step F			
L	SINAD Meter	[0] SKB pin 4	[2] L2	Adjust for best SINAD
M	AVO (10V DC)	[2] TP7	[2] L17	Adjust for maximum
N	Remove channel crystal and check that TP7 voltage falls by greater than 1V. Refit channel crystal			
P	SINAD Meter	[0] SKB pin 4	[2] RV1	Adjust for 12db SINAD Adjust [2] L17, if necessary, to achieve this
Q	On multi-channel equipment increase RF input by 2db; for each channel repeat step E, then check SINAD is greater than 12db			
R	SINAD Meter	[0] SKB pin 4 —	— [2] RV4	Reduce RF input level to give 10db SINAD Adjust so that squelch is just open Reduce input level by 6db; check squelch is closed
S	AF Voltmeter	[0] SKB pin 4	—	Increase RF input level to 1mV Switch off modulation; check fall in AF level is greater than 50db.

Disconnect all test equipment

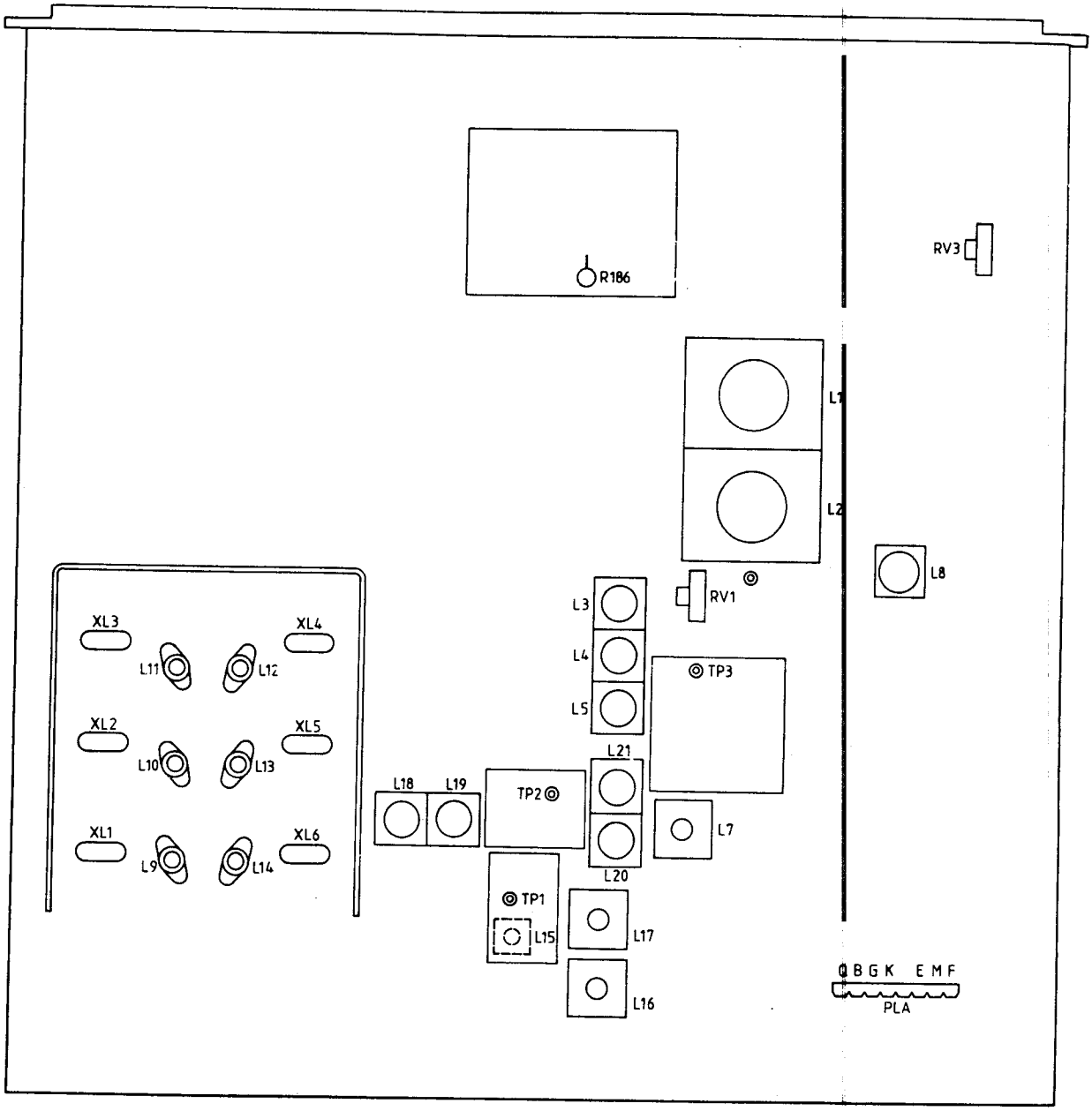

Fig 4.5 F496 Receiver Alignment Diagram

(ii) F496 EQUIPMENTS:–

STEP	TEST EQUIPMENT	TEST POINT	TUNE	ADJUSTMENT
A	AVO (2,5V DC)	[2] TP1	[2] L15, 16 [2] L17	Adjust for maximum Adjust for minimum
B	AVO (10V DC)	[2] TP2	[2] L18, 19	Adjust for minimum
C	AVO (2,5V DC)	[2] TP3	[2] L20, 21	Adjust for absolute maximum
D	AVO (2,5V DC)	[2] TP3	—	Remove crystal; check voltage is zero
E	Set [2] RV1,3 fully counter-clockwise, and [5] RV1 fully clockwise. Set RF signal generator output to 100mV unmodulated.			
F	SINAD Meter	[0] SKB pin 4	[2] L1-5	Tune in sequence for best quieting, reducing signal generator output, as necessary
G	Marker Oscillator			If necessary, adjust crystal oscillator for zero beat
H	Modulate RF input signal 1 kHz at 60% peak deviation, output 1mV			
J	AF voltmeter	[0] SKB pin 4	[2] L8	Tune for maximum output
K	Oscilloscope	[0] SKB pin 4	[2] L7	Tune for minimum distortion
L	AF Voltmeter	[2] PLA pin E	[2] RV1	Adjust for 100 ±5mV RMS
M	SINAD Meter	[0] SKB pin 4		Set RF input level to 0,35μV modulated as in step H. Check SINAD is greater than 12db
N	Repeat steps G and M for other channels as applicable			
P	SINAD Meter	[0] SKB pin 4		Reduce RF input level to give 10db SINAD
			[2] RV3	Adjust so that squelch is just open Reduce input level by 6db; check squelch is closed
Q	AF Voltmeter	[0] SKB pin 4		Increase RF input level to 1mV Switch off modulation; check that fall in AF level is greater than 50db

Disconnect all test equipment.

6. Tx Alignment

(a) Connect test equipment as shown in Fig. 4.8

(b) Select channel frequency closest to the centre frequency of the band covered

F494 EQUIPMENTS:–

(c) Set [3] RV5 to mid position
[3] RV6 to mid position
[3] RV7 fully clockwise

(d) Carry out the following alignment

STEP	TEST EQUIPMENT	TEST POINT	TUNE	ADJUSTMENT
A	AV0 (10V DC)	[3] TP2	[3] C119 [3] L26	Adjust for maximum Adjust for minimum
B	AV0 (10V DC)	[3] TP3	[3] L27 [3] L28	Adjust for maximum Adjust for minimum
C	AV0 (10V DC)	[3] TP4	[3] L29 [3] L30	Adjust for maximum Adjust for minimum
D	AV0 (10V DC)	[3] TP5	[3] L31 [3] L32	Adjust for maximum Adjust for minimum
E	Diode Probe	[3] C163	[3] L34,35,32	Adjust in order for maximum

Note: To prevent the diode probe reading being masked by saturation it may be necessary to turn [3] RV7 fully counter-clockwise whilst adjusting [3] L34,35,32. Turn fully clockwise on completion.

F	Set [3] C185 fully counter-clockwise			
G	Power Supply (current meter)	—	[3] C158,163	Adjust together for maximum supply current
H	RF Power Meter	—	[3] C158,163 [3] C172,177 [3] C183,185	Adjust in pairs for maximum power output

Note: On E band C158, 172, 183 may reach extreme settings near band edge.

K	RF Power Meter	—	[3] RV7	Increase slowly to maximum; check no instability is present
L	Set [3] RV6 for the required output power.			
M	Frequency Counter			Check each channel frequency is within 10Hz.
N	Modulation Meter	—	[3] RV6	With AF input level of 20mV at 1kHz adjust for peak system deviation

Note: Peak system deviation varies with channel spacing:

Channel spacing (S) 12,5 kHz - Peak Deviation 2,5 kHz
Channel spacing (R) 20 kHz - Peak Deviation 4 kHz
Channel Spacing (V) 25 kHz - Peak Deviation 5 kHz

P	Modulation Meter	[3] RV5	Reduce AF input level to 2mV; adjust for 60% peak deviation

Disconnect all test equipment

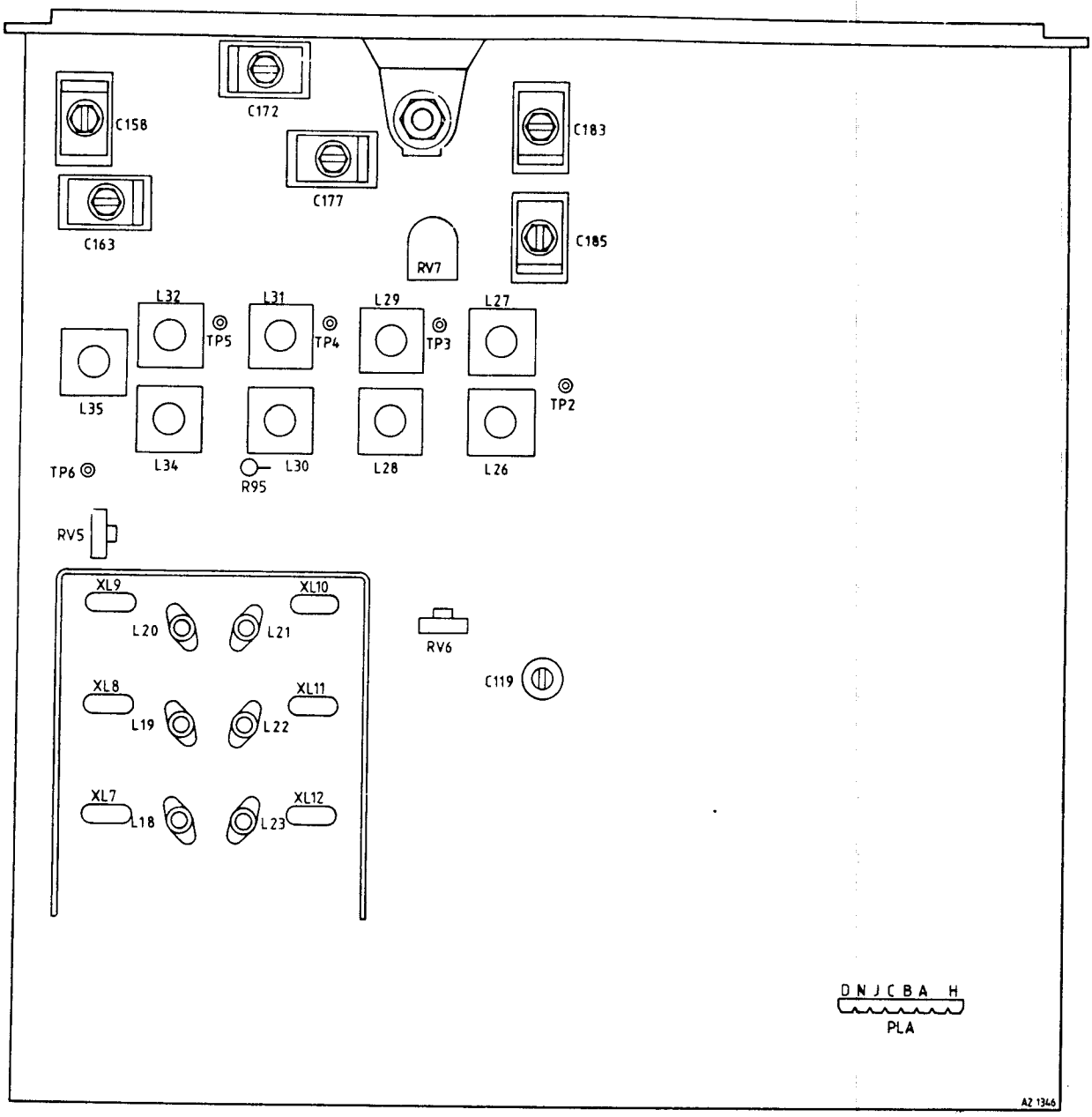

Fig 4.6 F494 Transmitter Alignment Diagram

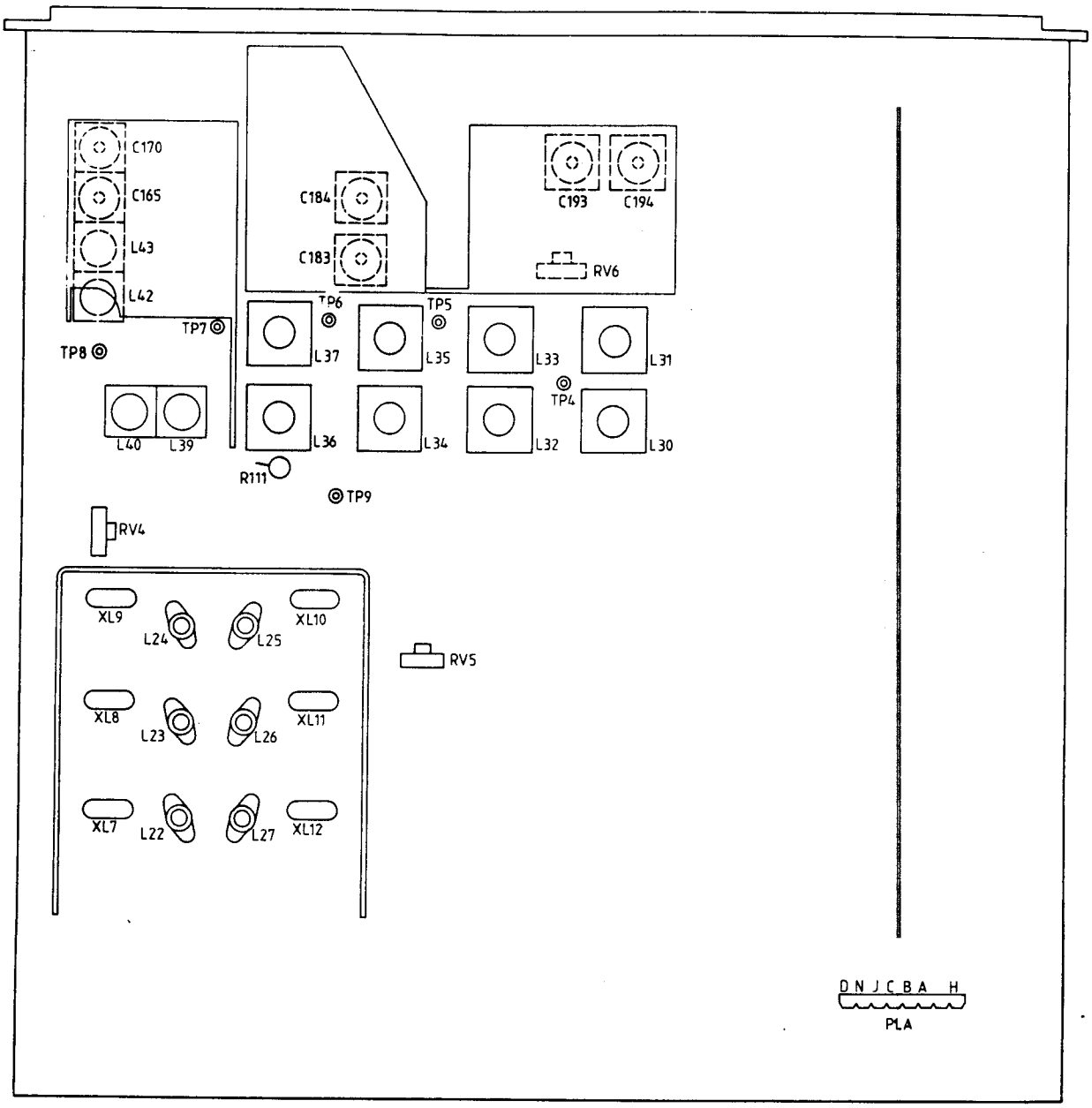

Fig 4.7 F496 Transmitter Alignment Diagram

F496 EQUIPMENTS:–

(c) Set cores of coils [3] L30-37 flush with the top of their formers
Set [3] C183, [3] C193 to half mesh
Set [3] C194 to minimum mesh
Set [3] C184 to three-quarters mesh; C165,C170 to quarter mesh. See Note 1.

(d) Set [3] RV4 to mid position
Set [3] RV5 to mid position
Set [3] RV6 fully counter-clockwise

(e) Carry out the following alignment:

STEP	TEST EQUIPMENT	TEST POINT	TUNE	ADJUSTMENT
A	AV0 (10V DC)	[3] TP4	[3] L30,31	Adjust for maximum
B	AV0 (2,5V DC)	[3] TP5	[3] L32,33 [3] L34	Adjust for maximum Adjust for minimum
C	AV0 (2,5V DC)	[3] TP6	[3] L35 [3] L36	Adjust for maximum Adjust for minimum
D	AV0 (2,5V DC)	[3]TP7	[3] L37 [3] L39	Adjust for maximum Adjust for minimum
E	AV0 (10V DC)	[3] TP8	[3] L39,40 [3] L42	Adjust for maximum Adjust for minimum

Note: For steps F to M inclusive the equipment MUST be supplied from the DC PSU.

F	DC PSU Ammeter		[3] L43 [3] C165	Adjust for maximum DC supply current } See Note 2
G	DC PSU Ammeter then RF Power Meter		[3] C165, C170 [3] C183 [3] C193, 194	Initially adjust for maximum DC supply current. When power meter registers output power tune for maximum output power
H (25W Units only)	RF Power Meter		[4] C306 [3] C193 [3] C194 [4] C306 [3] C183,193 [3] C194 [4] C306	Tune for maximum power output SET AT FULL MESH Tune for maximum power output Tune for maximum power output Tune for maximum power output Tune for maximum power output
J	RF Power meter		[3] L37 [3] L39,40 [3] L42,43 [3] C165	De-tune to give less than 5W (20W for 25W equipments) output. Tune for maximum power output further de-tuning [3] L37 if necessary to keep power below 5W (20W for 25W equipments)
	AV0 (2,5V DC)	[3] TP7	[3] L37	Adjust for maximum - See Note 3
	RF Power Meter		[3] RV6	Vary from fully counter clockwise to fully clockwise, check no instability is present throughout range
K	Set [3] RV6 for the required output power			
L	Frequency Counter			Check each channel frequency is within 10Hz
M	Modulation Meter		[3] RV5	With AF input level of 20mV at 1 kHz adjust for peak system deviation

Notes. 1. For minimum stress and maximum reliability, these settings MUST be used when tuning previously unaligned equipment.

2. As soon as RF power is indicated on meter adjust to that.

3. Check RF power; if greater than 30W adjust RV1 (SET VOLTS) on Regulator board to reduce output at pin 8 of board from 15V to not less than 13,5V DC.

For '12V Standby Battery' equipments only, a trickle charging facility may be fitted. It is suitable only for nickel-cadmium cells (NOT lead-acid type batteries). A 12-cell 7AH nickel cadmium battery is therefore recommended as the standby source for these equipments.

Use of the trickle charge facility requires the addition of the following components to the Regulator Board AT28724/02:–

R14	56Ω	5%	6W	(PM01221)
D4	BYW54 or equivalent			(FV05892)

Note: *On equipments with a 'standby battery' facility it is advisable to check at regular intervals that the battery is functioning by switching off the AC supply and operating from the battery.*

5. Power Supply Indications

(a) Set the DC PSU output voltage as follows:
12V DC Unit – 13,8±0,2V DC
24V DC Unit – 26,4±0,2V DC

With reference to Fig 2.1 connect the PSU to PLD (DC INPUT) on the connector panel

(b) Check the LED1 (Red) on the regulator board and the Power On indicator (Green) on the connector panel are both lit.

(c) Where applicable, connect the unit to the AC supply and check that LED1 (Red) on the regulator board goes out and LED2 (Green) lights. Disconnect the AC supply, check indications as in (b)

(d) Refit the cover to the unit.

6. Tx Power

(a) Connect the RF power meter to the TX/COM antenna socket

(b) Key the transmitter using either:–
Engineers handset (EHS) connected to SKB on Connector Panel, or shorting link between pins 3 and 5 of SKB

(c) Check that the RF power meter reading is correct for the power output code:

Power Output Code	Power Meter Reading
Code 1 (25W)	25–30W
Code 2 (15W)	15–18W
Code 3 (10W)	10–12W
Code 4 (6W)	6–8W
Code 5 (1W) – (F496 only)	1–2W

(d) Remove the EHS or short circuit as appropriate and disconnect the RF power meter.

7. AF Output

Note: For single antenna working the TX/COM antenna socket only is used.

(a) Connect the signal generator to the appropriate antenna socket as shown in Fig 2.1; modulate the output at 1kHz to 60% of peak system deviation at a level of 1mV.

(b) Connect the Engineers Handset to SKB on the connector panel, check that a 1kHz tone can be heard.

Where an EHS is not available this check may be performed as follows:

(i) Connect the oscilloscope across pins 4 and 6 of SKB

(ii) Check that a 1kHz, 1V peak-to-peak sine wave is present

(c) Remove all test equipment

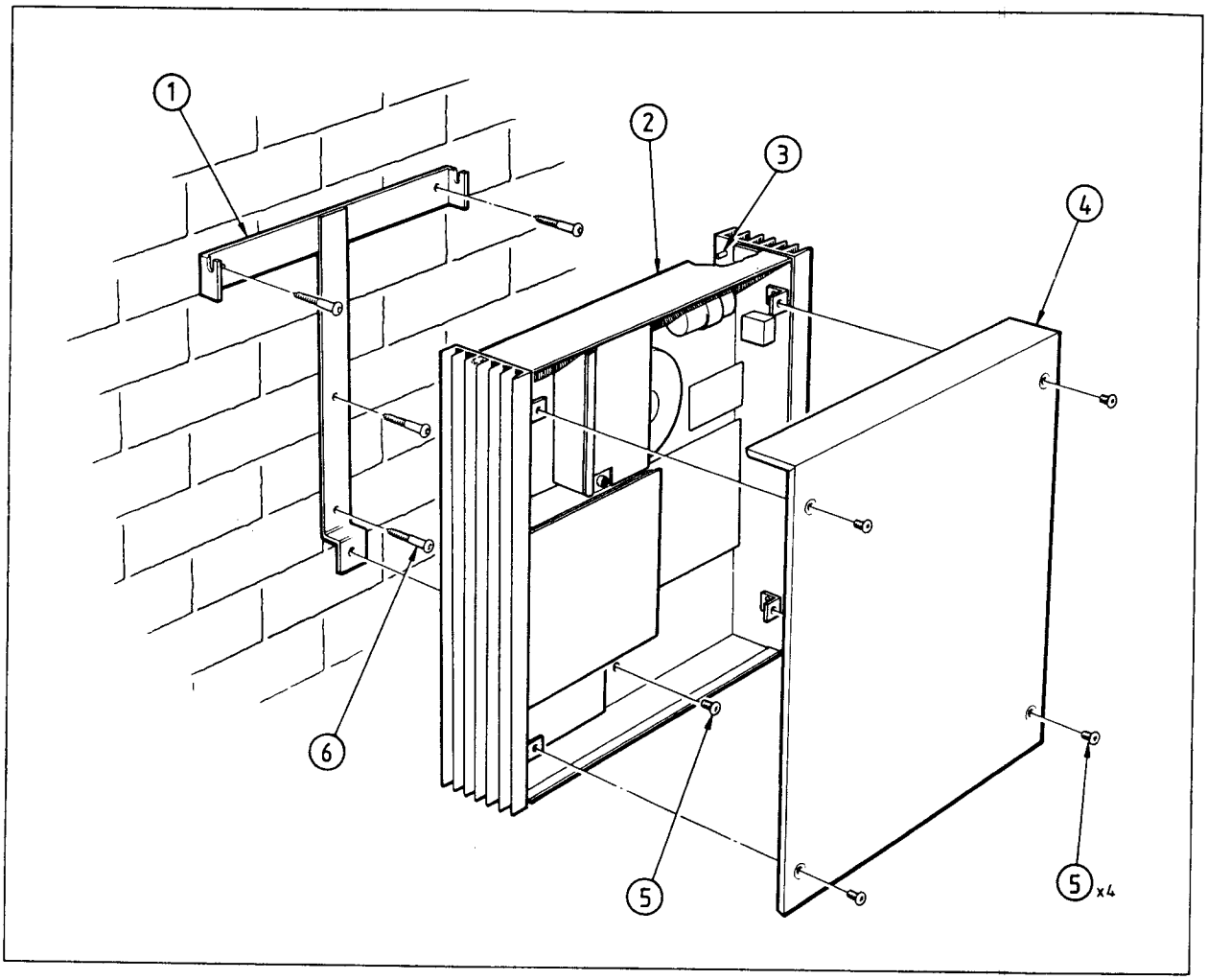

Fig 2.2 Wall Mounted Equipment

1. Cradle
2. F490 equipment
3. Locating pin
4. Equipment cover
5. M5 x 8mm screw
6. Cradle securing screws (not supplied)

For Service Manuals Contact
MAURITRON TECHNICAL SERVICES
8 Cherry Tree Rd, Chinnor
Oxon OX9 4QY
Tel:- 01844-351694 Fax:- 01844-352554
Email:- enquiries@mauritron.co.uk

INSTALLATION

The unit is designed to be mounted vertically (i.e. with the cooling fins of the heatsink assemblies running in the vertical plane) on a wall using the cradle provided (see Fig 2.2).

Note: The location of the unit must allow for:

(i) Adequate air flow around the heatsinks

(ii) Adequate clearances for connectors and securing screws

(iii) Standard lengths of supply and interconnecting cables.

(iv) Suitable location of antennas

Procedures

1. Check the practicability of the installation by placing the units in position and running the cables.
2. Wall Mounted Equipment
   (a) Using the cradle as a template mark the position of the fixing holes.
   (b) Drill and plug the wall.
   (c) Secure the cradle to the wall using suitable screws.

   Note: The cradle must be firmly secured to the wall in order to take the weight of the unit.

   (d) Remove the cover from the unit (see EQUIPMENT ACCESS in Section 4).
   (e) Locate the transceiver in the cradle and secure it in position using the M5 x 8mm screw provided.
3. Connect the antenna feeder plug provided, to the antenna feeder as shown in Fig 2.4
4. Install the antenna(s) according to the manufacturers instructions.
5. Referring to Fig 2.3 connect the required power supplies and control cable to the equipment.

   Note: An M4 threaded hole is provided on the 'rear' of the unit chassis (arrowed from the Connector Panel) for connection of a protection earth terminal where no other safe path to earth exists.

CAUTION
To avoid internal damage to the equipment the maximum permissable length of screw is 8 mm

6. Carry out a frequency count check on each channel (detail below).
7. Where applicable, set up 600 ohm line levels by adjusting [5] RV2 and [5] RV3, normally –6dbm for 60% peak system deviation at 1 kHz.

   Note: Where an AC Signalling Control Module (AT28829/01) is fitted the hybrid circuit must be balanced by carrying out the procedure detailed in SECTION 4 Paragraph 7.(d).

8. Carry out an air check.

FREQUENCY COUNT

Transmitter

1. Connect the RF power meter to the TX/COM antenna socket. Loosely couple frequency counter to the antenna socket.
2. Key the transmitter on each channel in turn, check counter reading is within 10 Hz of allocated channel frequency. Adjust the inductors as listed below, if necessary, to achieve this:–

   F494. L18–23 (as appropriate) on the transmitter board.
   F496. L22–27 (as appropriate) on the transmitter board.

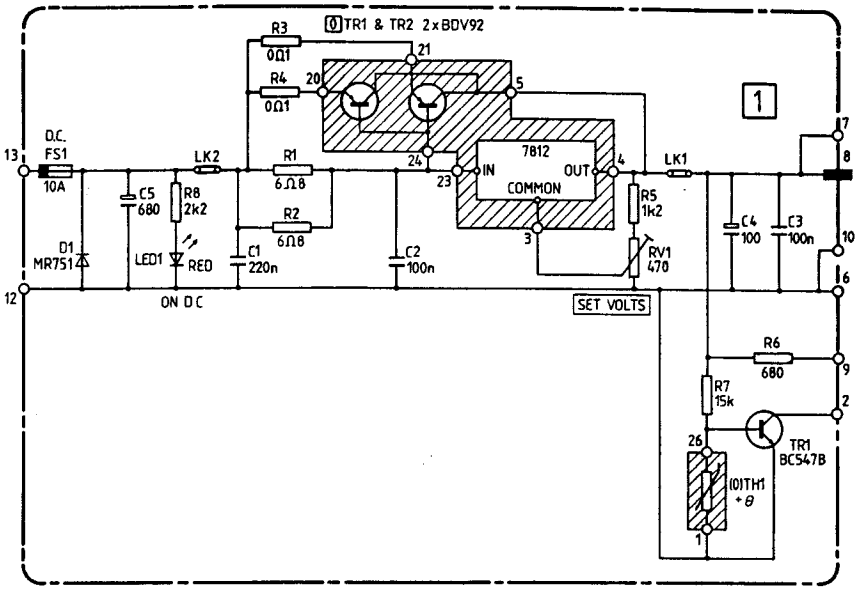

AT28724/03

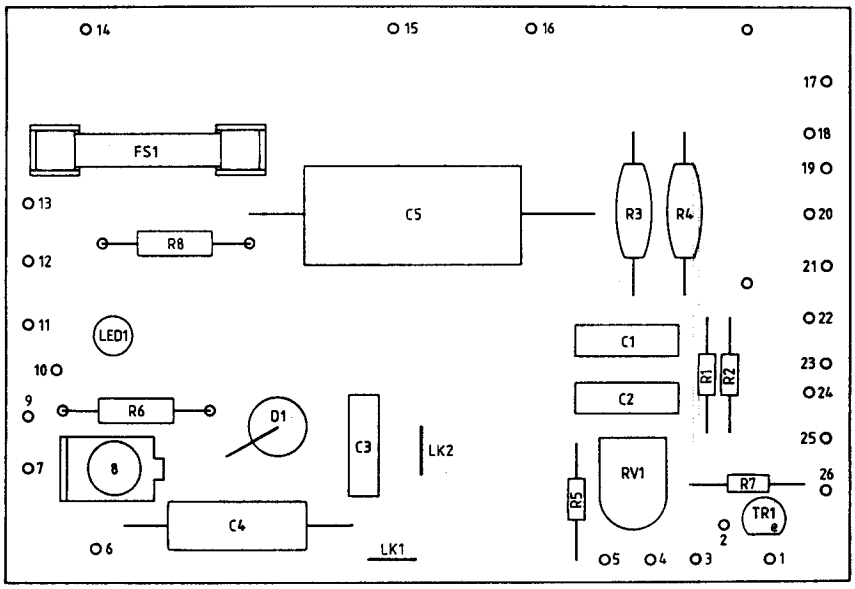

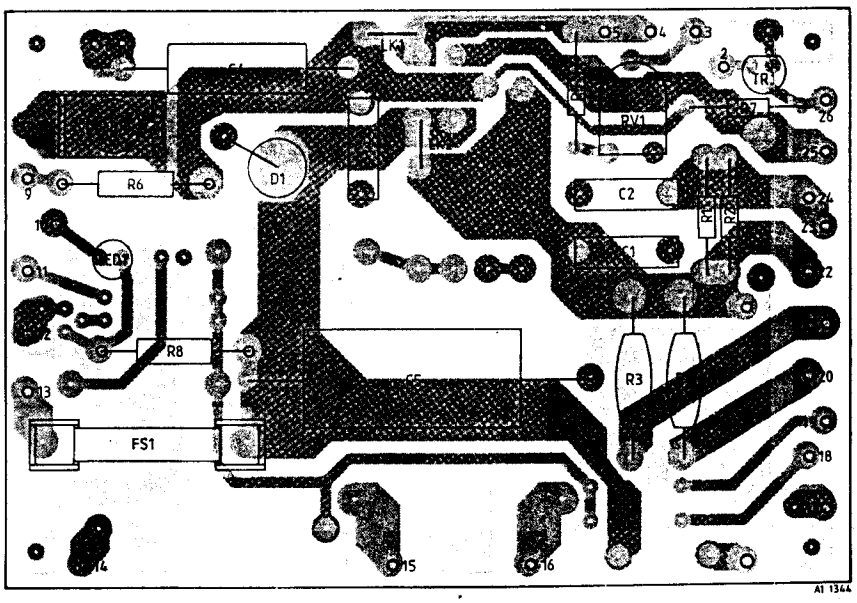

FIG 6.3 24V DC (ONLY) REGULATOR
AT28724/03
CIRCUIT AND LAYOUT DIAGRAMS

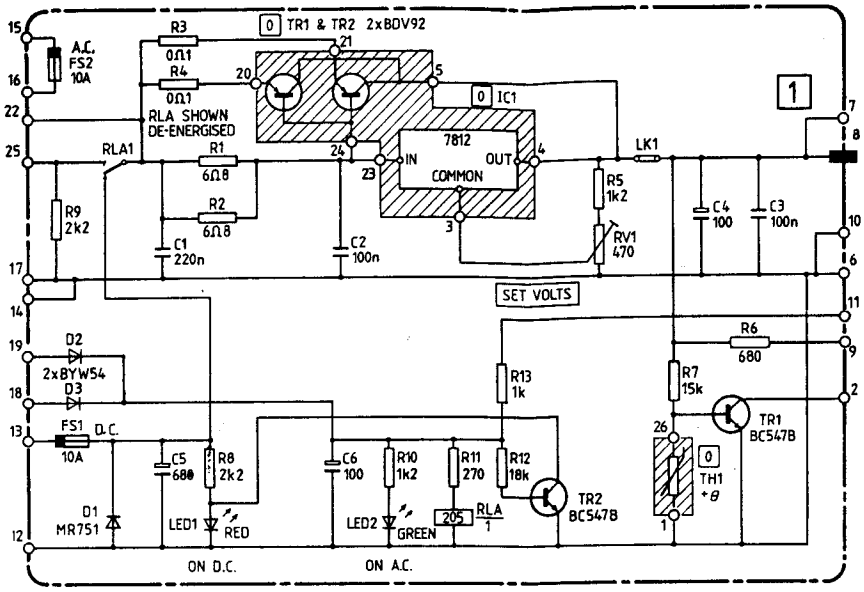

AT28724/01

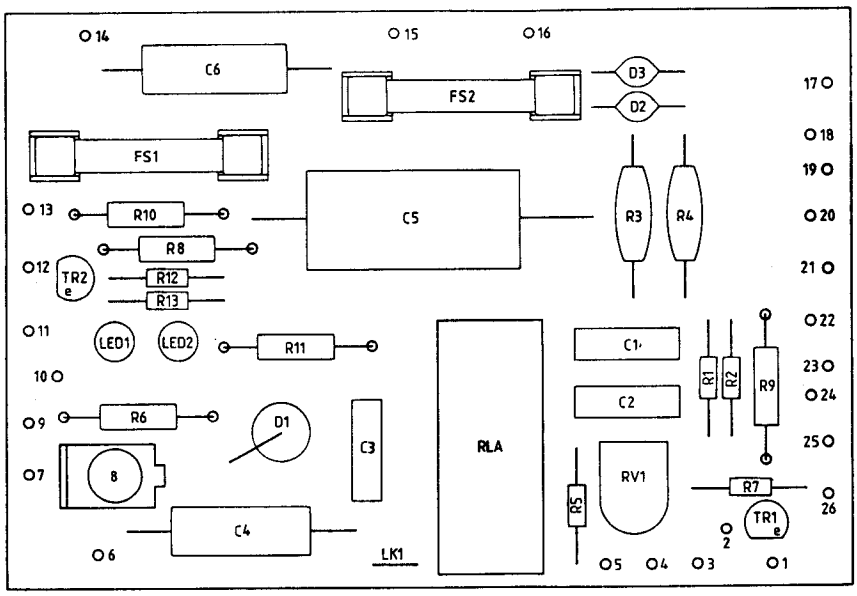

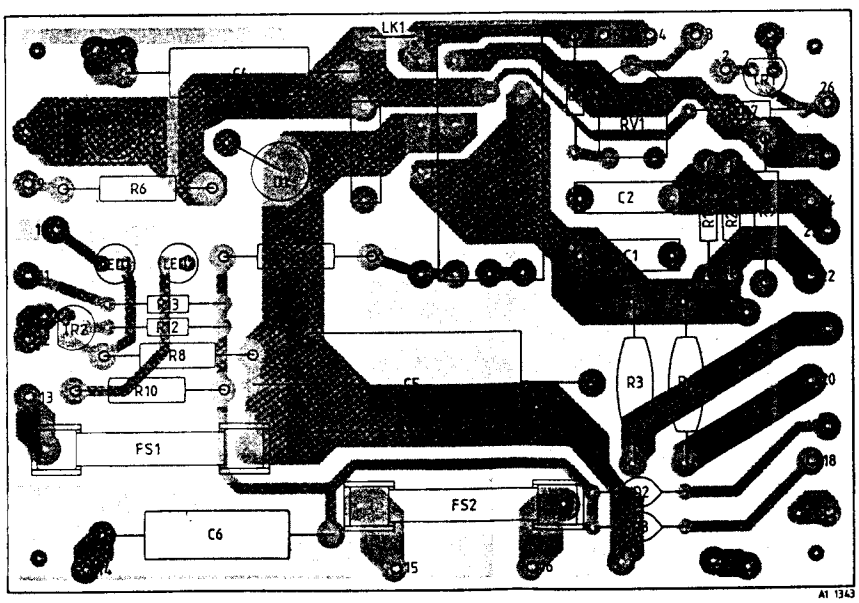

For Service Manuals Contact
MAURITRON TECHNICAL SERVICES
8 Cherry Tree Rd, Chinnor
Oxon OX9 4QY
Tel:- 01844-351694 Fax:- 01844-352554
Email:- enquiries@mauritron.co.uk

FIG 6.4 AC/24V DC REGULATOR
AT28724/01
CIRCUIT AND LAYOUT DIAGRAMS

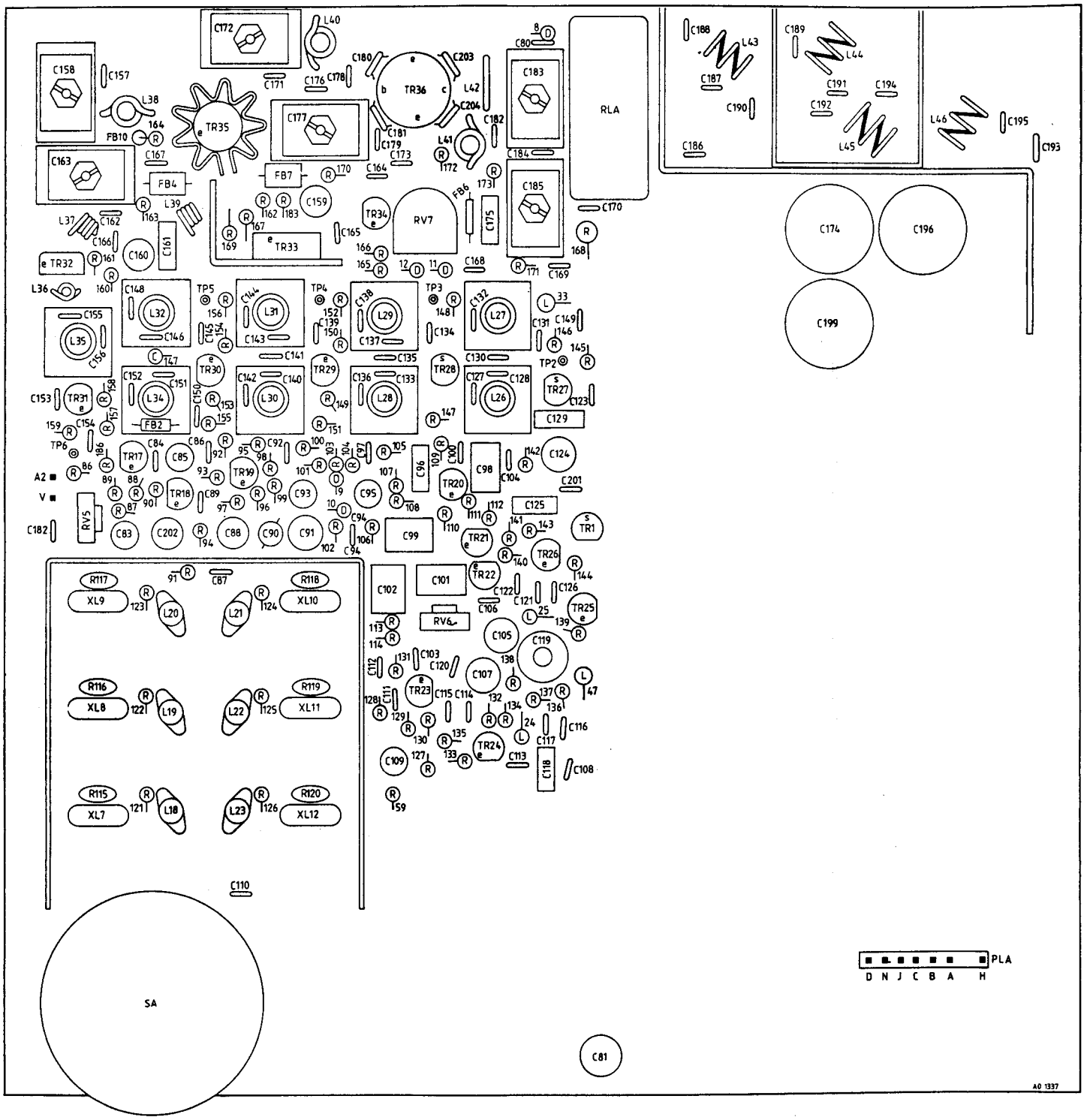

FIG. 6.5 F494 – TX BOARD
AT28751/–
LAYOUT DIAGRAM

NOTE

'E' Band – L37 is replaced by R188 and FB9

'B' Band – R189 fitted to solder side, electrically across R161

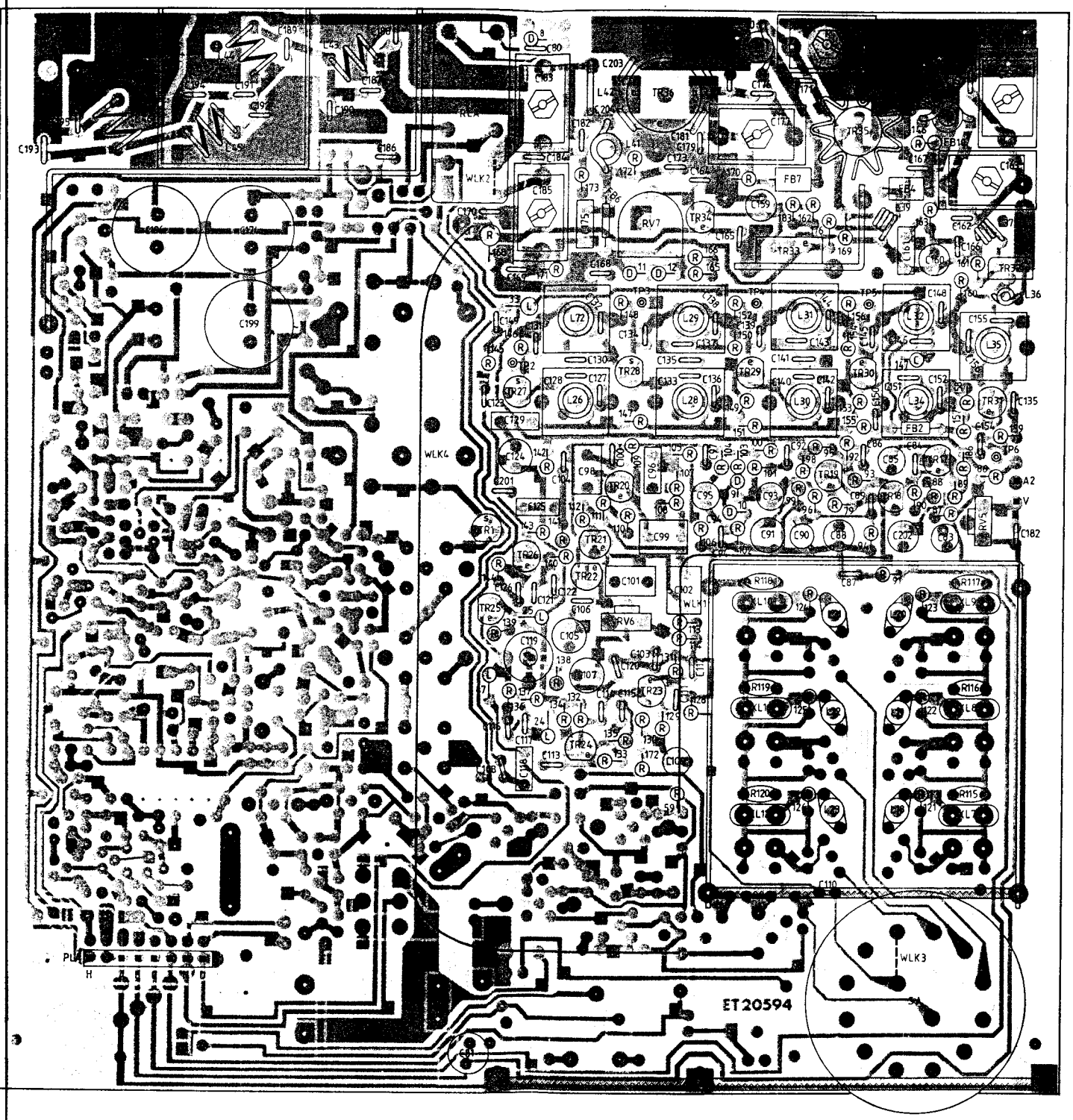

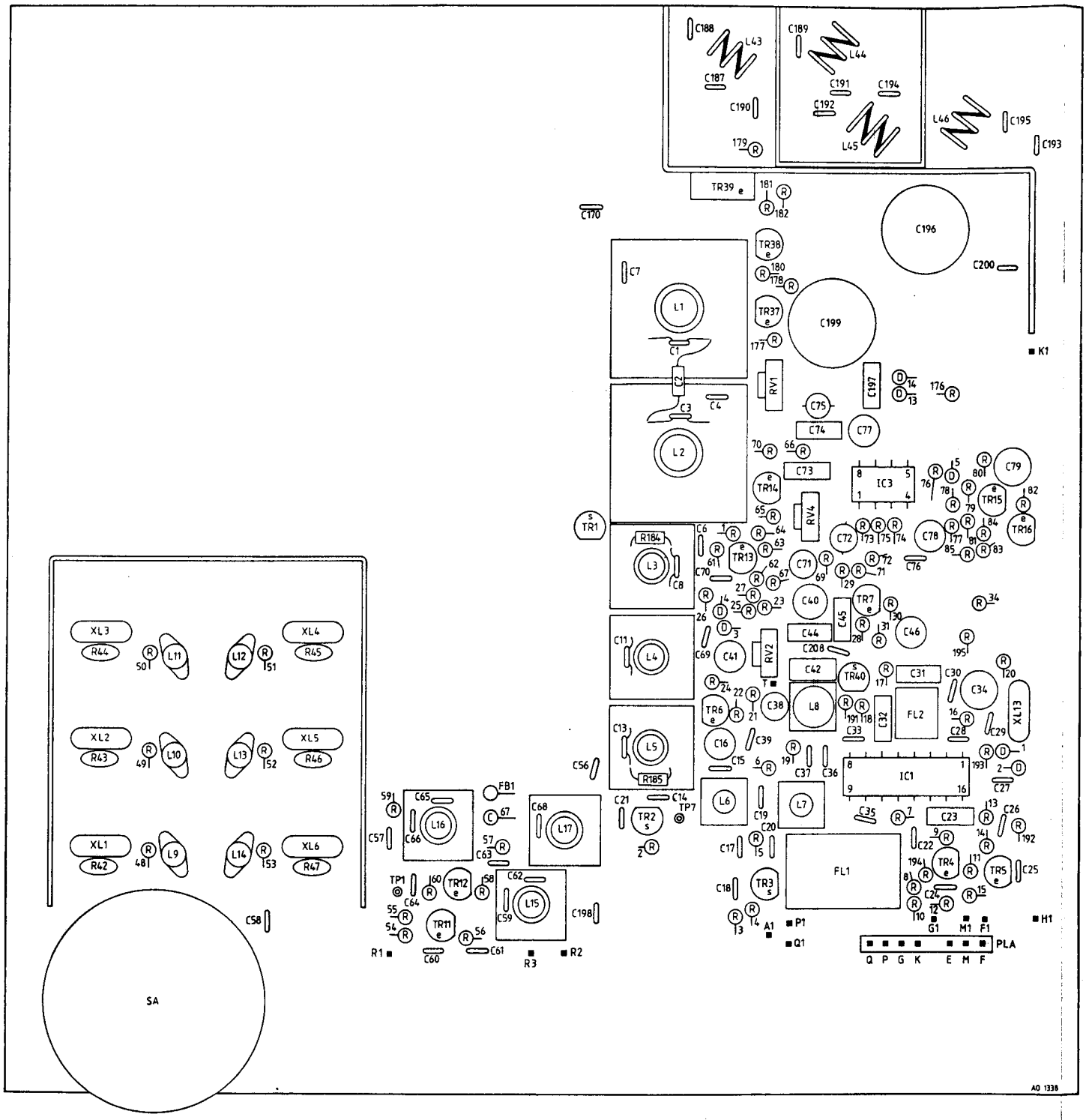

FIG. 6.6 F494 – RX BOARD
AT28752/–
LAYOUT DIAGRAM

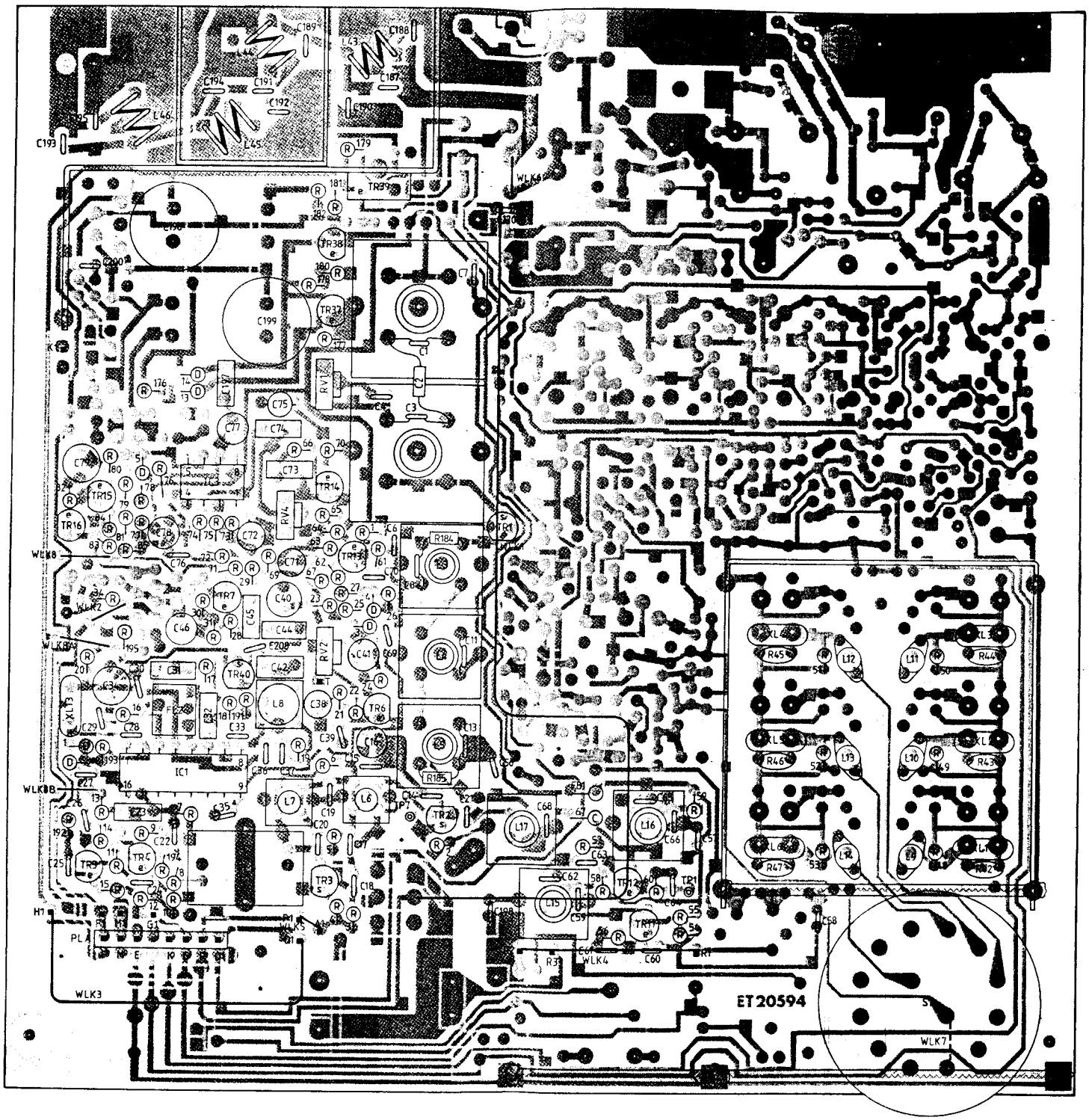

NOTE

'E' Band – C201 fitted to solder side, electrically across R4

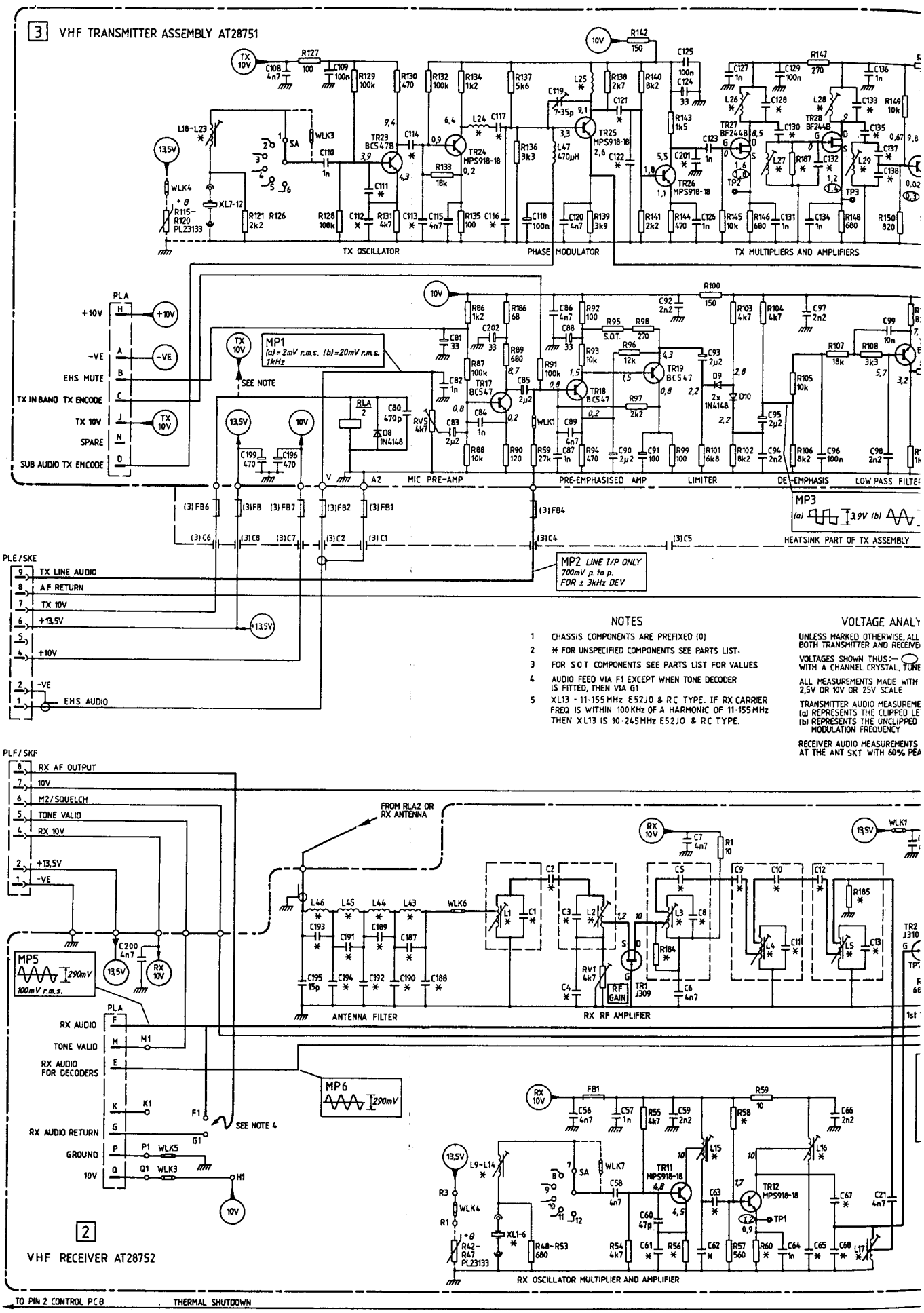
3 VHF TRANSMITTER ASSEMBLY AT28751
TX OSCILLATOR
PHASE MODULATOR
TX MULTIPLIERS AND AMPLIFIERS
PLA
+10V
-VE
EHS MUTE
TX IN BAND TX ENCODE
TX 10V
SPARE
SUB AUDIO TX ENCODE
MP1
(a) = 2mV r.m.s. (b) = 20mV r.m.s. 1kHz
SEE NOTE
MIC PRE-AMP
PRE-EMPHASISED AMP
LIMITER
DE-EMPHASIS
LOW PASS FILTER
MP3
HEATSINK PART OF TX ASSEMBLY
PLE/SKE
TX LINE AUDIO
AF RETURN
TX 10V
+13.5V
+10V
-VE
EHS AUDIO
MP2 LINE I/P ONLY 700mV p. to p. FOR ± 3kHz DEV
NOTES
1 CHASSIS COMPONENTS ARE PREFIXED (0)
2 * FOR UNSPECIFIED COMPONENTS SEE PARTS LIST.
3 FOR SOT COMPONENTS SEE PARTS LIST FOR VALUES
4 AUDIO FEED VIA F1 EXCEPT WHEN TONE DECODER IS FITTED, THEN VIA G1
5 XL13 - 11·155 MHz E52J0 & RC TYPE. IF RX CARRIER FREQ IS WITHIN 100 KHz OF A HARMONIC OF 11·155 MHz THEN XL13 IS 10·245 MHz E52J0 & RC TYPE.
VOLTAGE ANALY
UNLESS MARKED OTHERWISE, ALL BOTH TRANSMITTER AND RECEIVE
VOLTAGES SHOWN THUS:— WITH A CHANNEL CRYSTAL, TUNE
ALL MEASUREMENTS MADE WITH 2,5V OR 10V OR 25V SCALE
TRANSMITTER AUDIO MEASUREME
(a) REPRESENTS THE CLIPPED LE
(b) REPRESENTS THE UNCLIPPED MODULATION FREQUENCY
RECEIVER AUDIO MEASUREMENTS AT THE ANT SKT WITH 60% PEA
PLF/SKF
RX AF OUTPUT
10V
M2/SQUELCH
TONE VALID
RX 10V
+13.5V
-VE
FROM RLA2 OR RX ANTENNA
ANTENNA FILTER
RX RF AMPLIFIER
MP5
100mV r.m.s.
PLA
RX AUDIO
TONE VALID
RX AUDIO FOR DECODERS
RX AUDIO RETURN
GROUND
10V
MP6
SEE NOTE 4
2 VHF RECEIVER AT28752
RX OSCILLATOR MULTIPLIER AND AMPLIFIER
TO PIN 2 CONTROL PCB
THERMAL SHUTDOWN

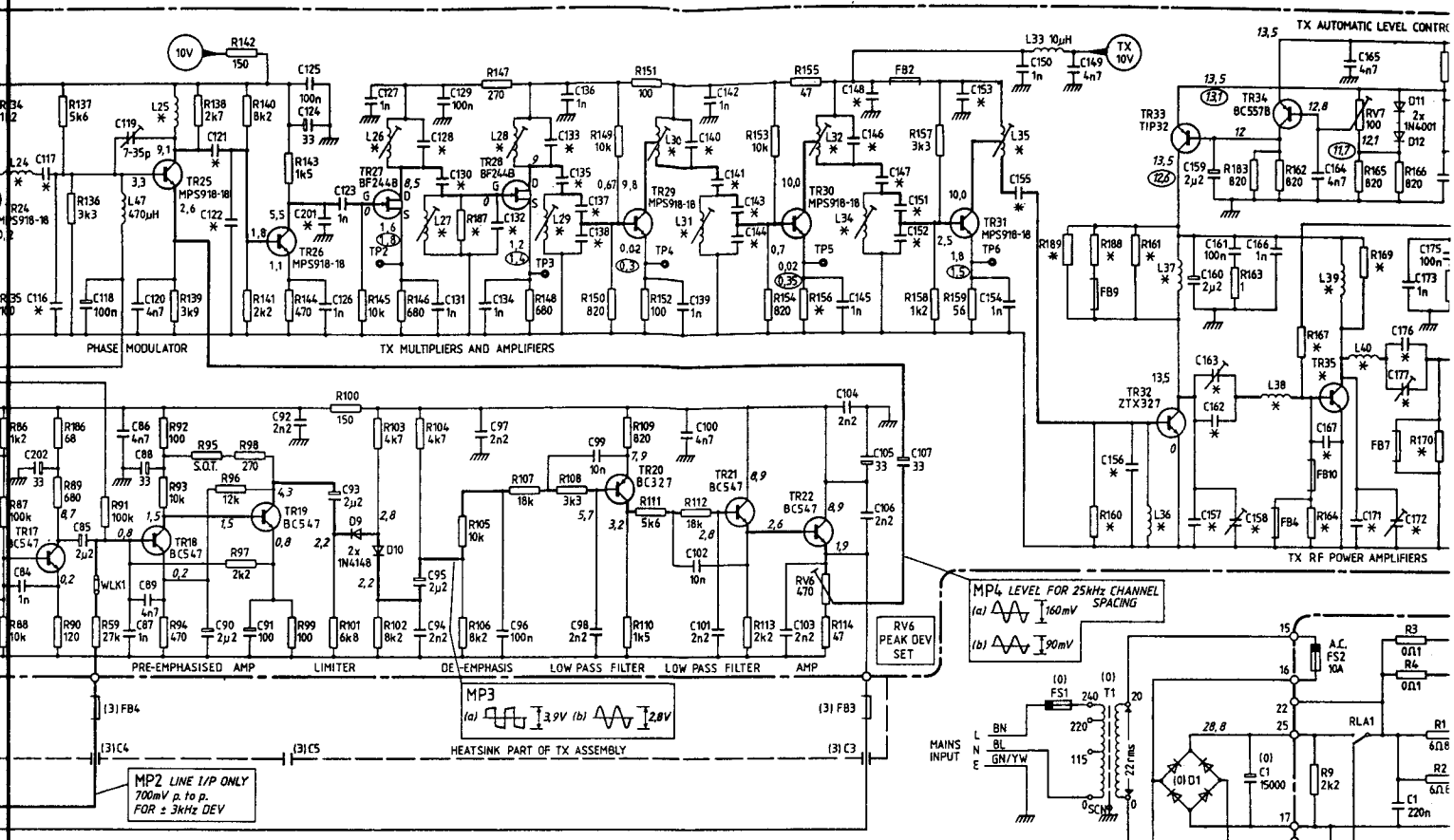

NOTES

1. CHASSIS COMPONENTS ARE PREFIXED (0)
2. * FOR UNSPECIFIED COMPONENTS SEE PARTS LIST.
3. FOR SOT COMPONENTS SEE PARTS LIST FOR VALUES
4. AUDIO FEED VIA F1 EXCEPT WHEN TONE DECODER IS FITTED, THEN VIA G1
5. XL13 - 11·155MHz ES2JO & RC TYPE. IF RX CARRIER FREQ IS WITHIN 100KHz OF A HARMONIC OF 11·155MHz THEN XL13 IS 10·245MHz ES2JO & RC TYPE.

VOLTAGE ANALYSIS FOR A BAND F494

UNLESS MARKED OTHERWISE, ALL VOLTAGES SHOWN ARE MEASURED WITH BOTH TRANSMITTER AND RECEIVER ENERGISED, BUT UNCRYSTALLED

VOLTAGES SHOWN THUS :— ◯ REPRESENT TYPICAL VALUES WHEN FITTED WITH A CHANNEL CRYSTAL, TUNED ACCORDING TO THE HANDBOOK

ALL MEASUREMENTS MADE WITH A 20kΩ/VOLT METER ON EITHER THE 2,5V OR 10V OR 25V SCALE

TRANSMITTER AUDIO MEASUREMENTS ARE SHOWN AT TWO LEVELS
(a) REPRESENTS THE CLIPPED LEVEL SET FOR PEAK DEVIATION
(b) REPRESENTS THE UNCLIPPED LEVEL SET 60% PEAK DEVIATION AT 1kHz MODULATION FREQUENCY

RECEIVER AUDIO MEASUREMENTS ARE SHOWN FOR 1mV p.d. R.F SIGNAL LEVEL AT THE ANT SKT WITH 60% PEAK DEVIATION 1kHz MODULATION FREQUENCY

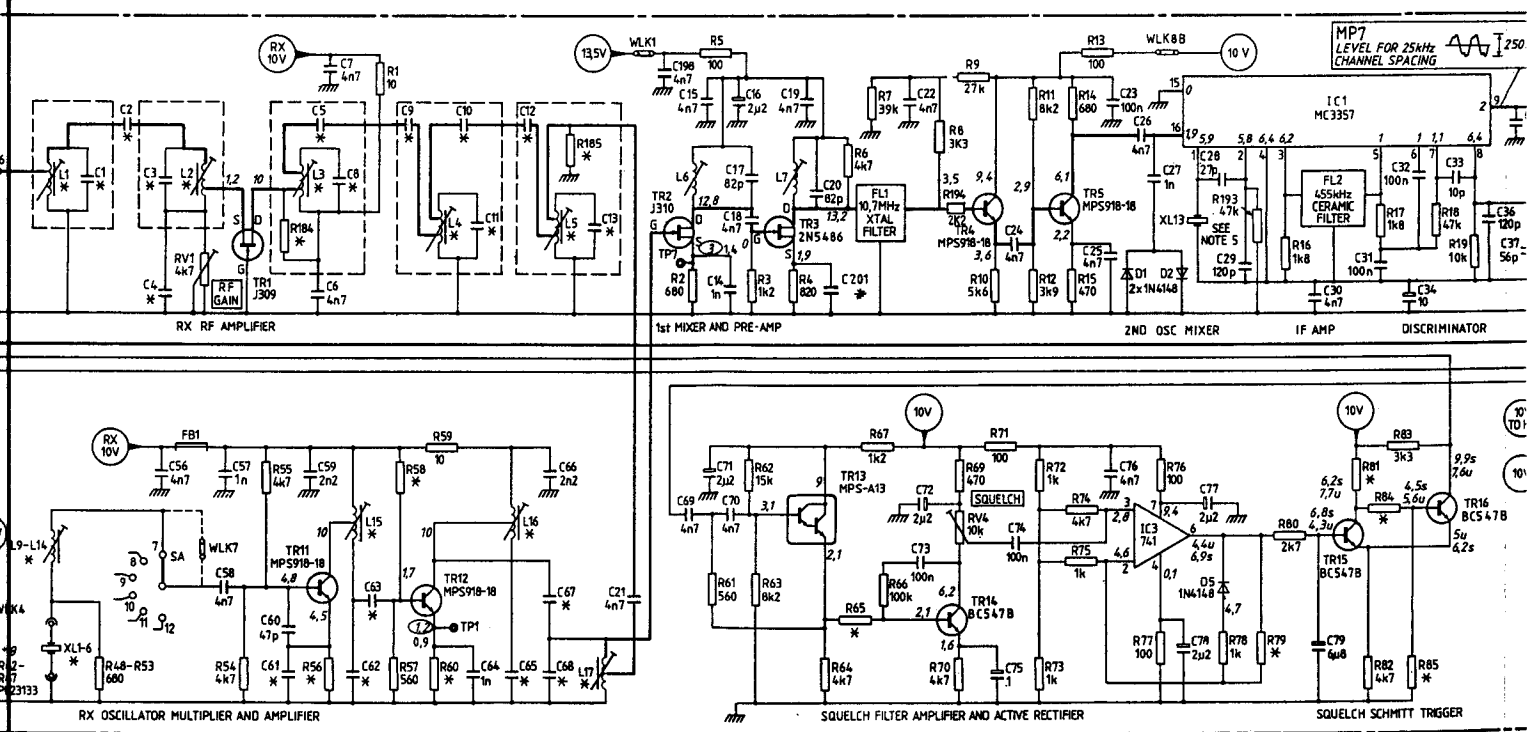

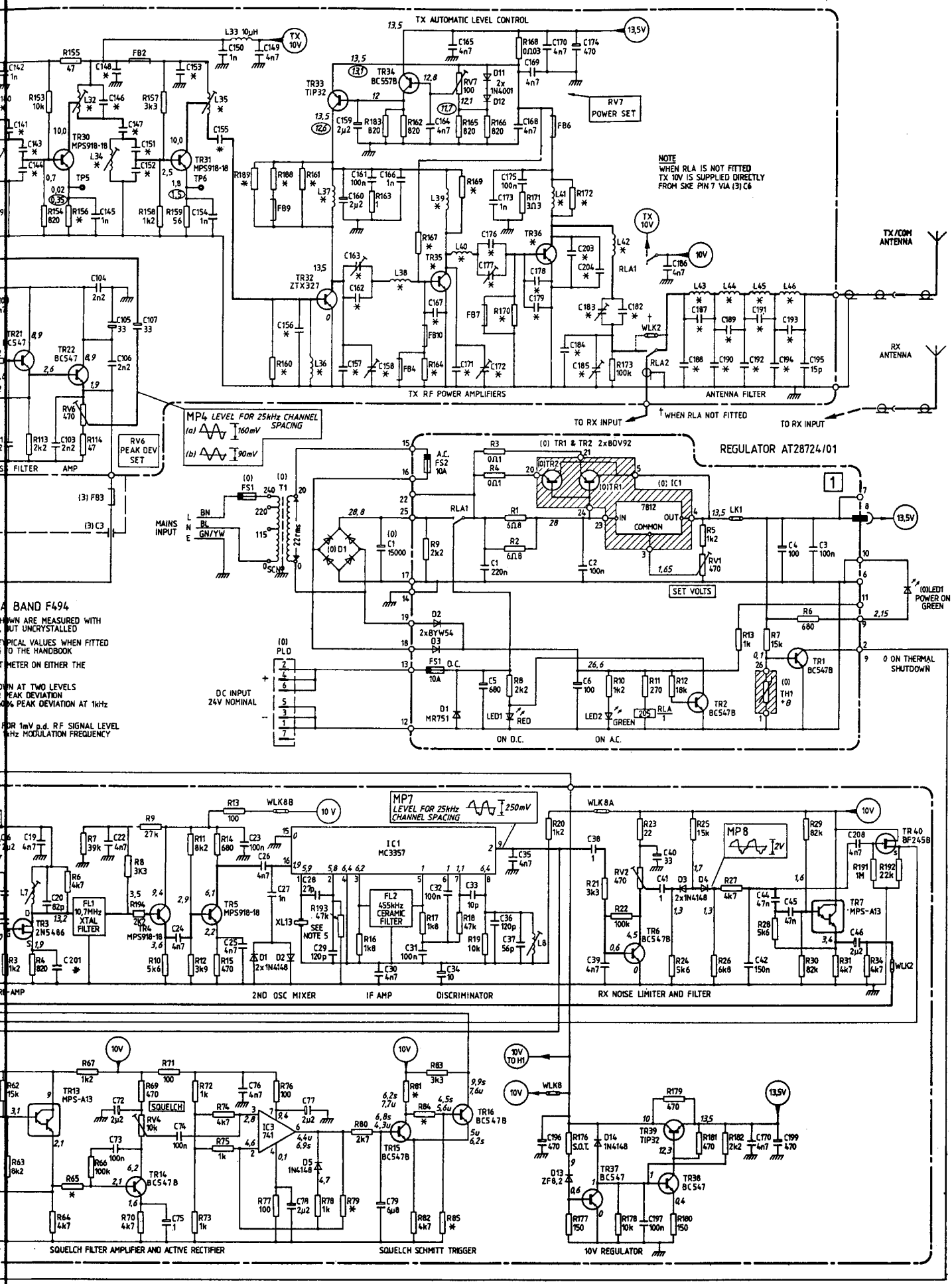

FIG. 6.7 F494 TRANSCEIVER CIRCUIT DIAGRAM

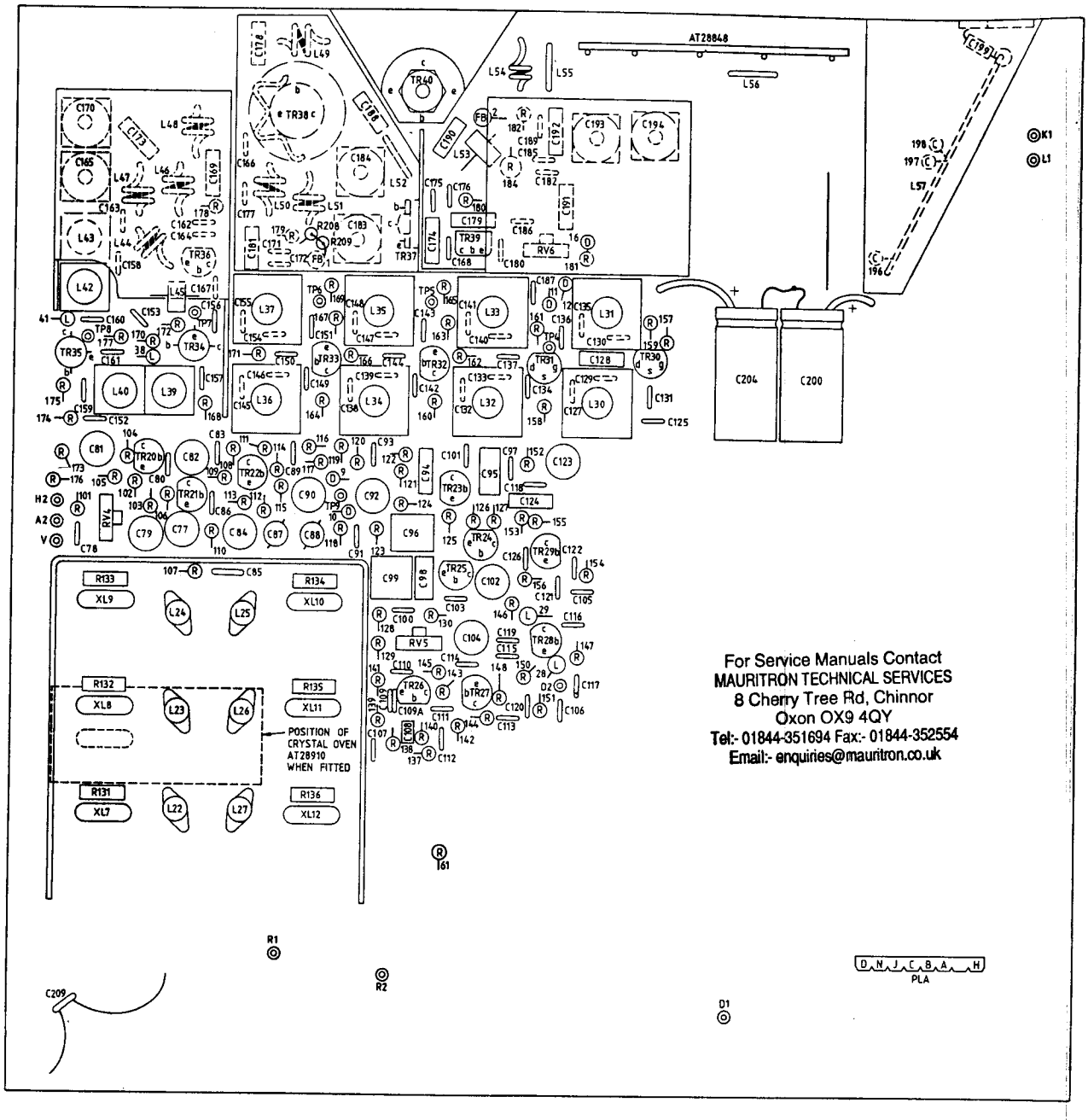

TRANSMIT

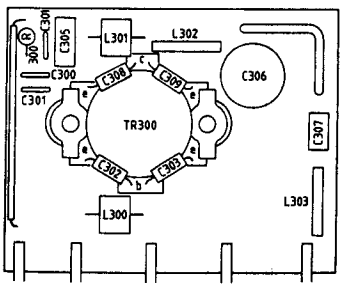

AT28848

TP101/4

FIG. 6.8 F496 – TX BOARD
AT28727/–
LAYOUT DIAGRAM

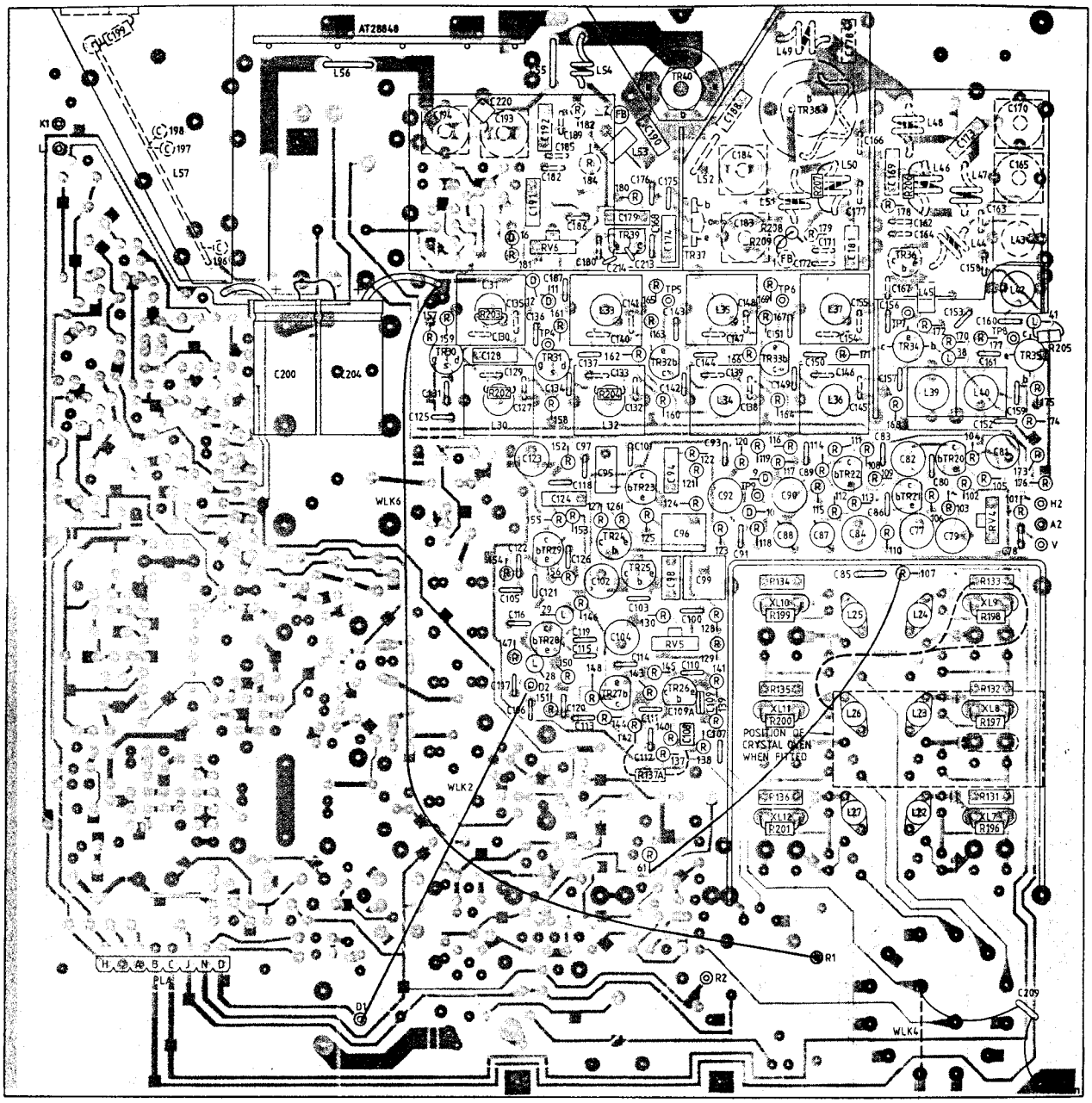

TRANSMITTER

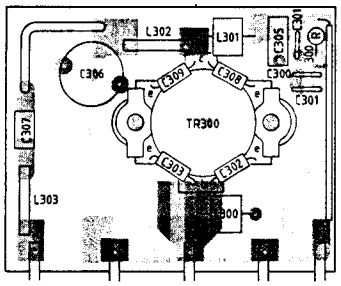

AT28848

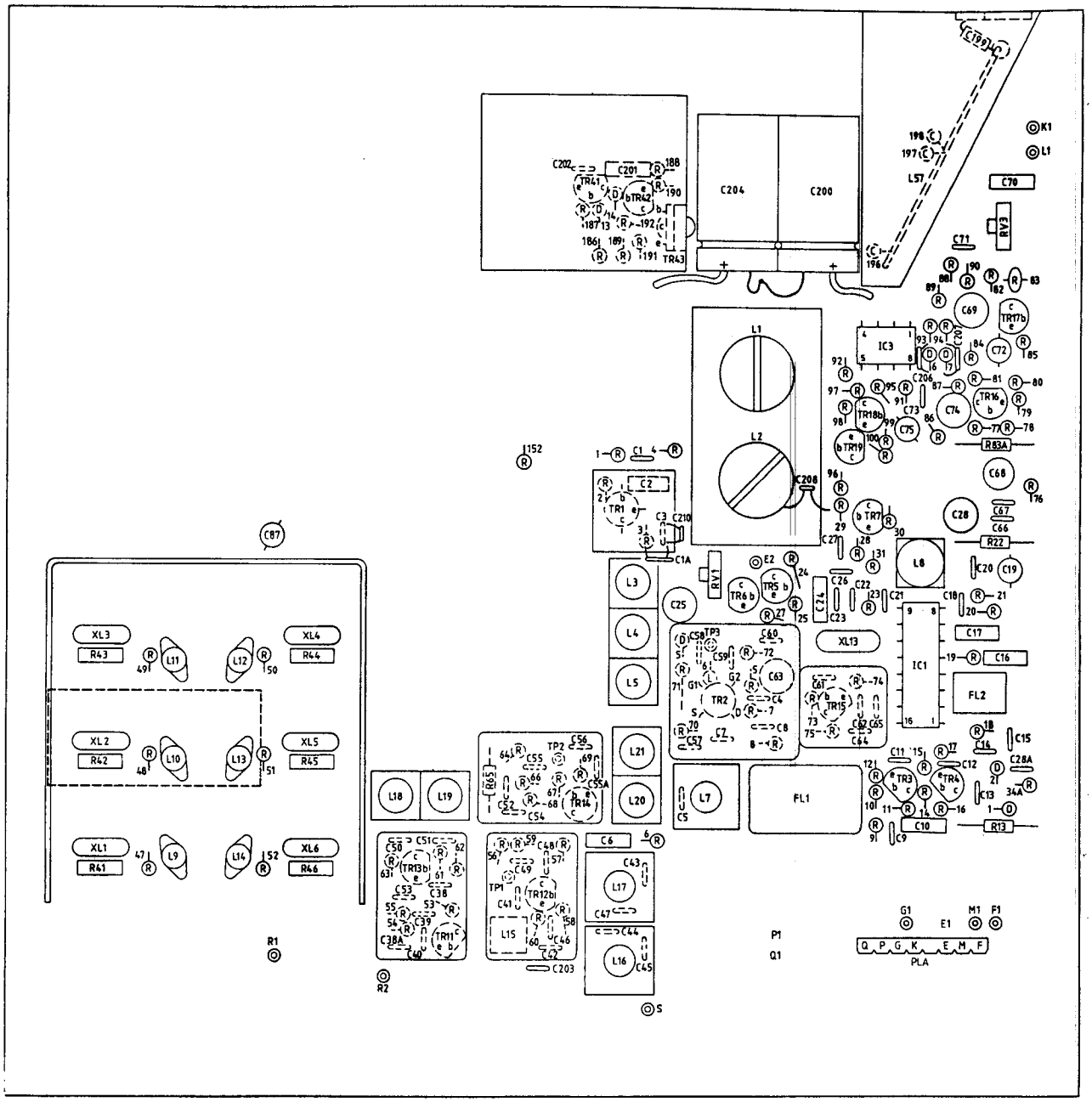

FIG. 6.9 F496 – RX BOARD
AT28728/–
LAYOUT DIAGRAM

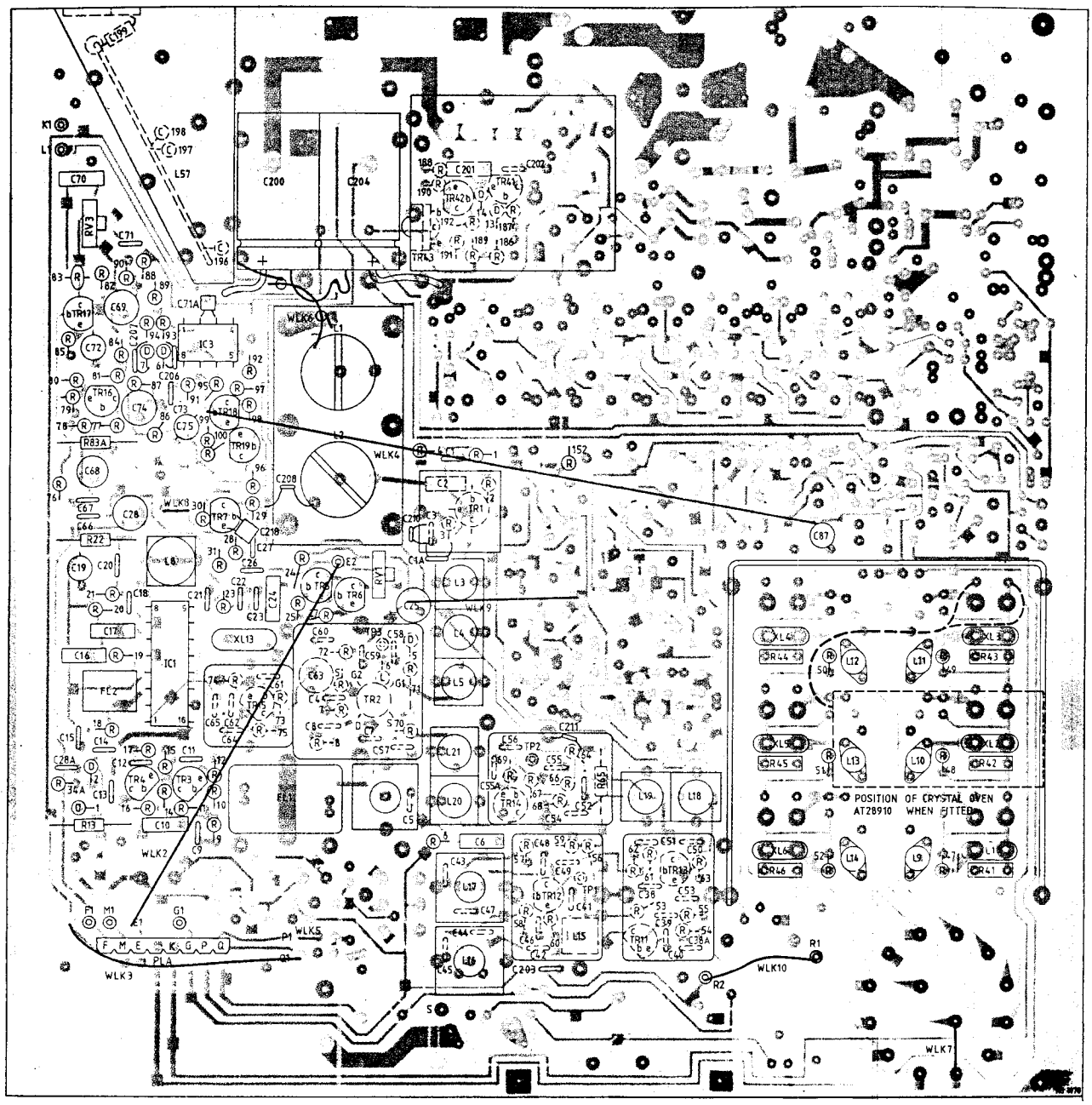
POSITION OF CRYSTAL OVEN
AT28910 WHEN FITTED
WLK2
WLK3
WLK4
WLK5
WLK7
WLK8
WLK9
WLK10
C200
C204
C201
C202
C87
C70
C71
C69
C72
C74
C75
C68
C67
C66
C28
C19
C20
C18
C17
C16
C15
C14
C11
C10
C13
C9
C5
C6
C26
C27
C208
C210
C218
C211
C203
C206
C207
C71A
C28A
C34A
C38A
C39
C40
C41
C42
C43
C44
C45
C46
C47
C48
C49
C50
C51
C52
C53
C54
C55
C56
C57
C58
C59
C60
C61
C62
C63
C64
C65
C21
C22
C23
C24
C25
C8
R22
R83A
R13
R65
R44
R45
R46
R43
R42
R41
RV1
RV2
RV3
IC1
IC3
FE2
XL13
XL4
XL5
XL6
XL9
XL10
XL11
XL12
XL13
XL14
XL15
XL16
XL17
XL18
XL19
XL20
XL21
L1
L2
L3
L4
L5
L6
L8
L9
L10
L11
L12
L13
L14
L15
L16
L17
L18
L19
L57
TR1
TR2
TR3
TR4
TR5
TR6
TR7
TR11
TR12
TR13
TR14
TR16
TR17
TR18
TR19b
TR42b
TR44
TP1
TP2
K1
L1
P1
M1
G1
F M E K G P Q
PLA
R1
R2
S

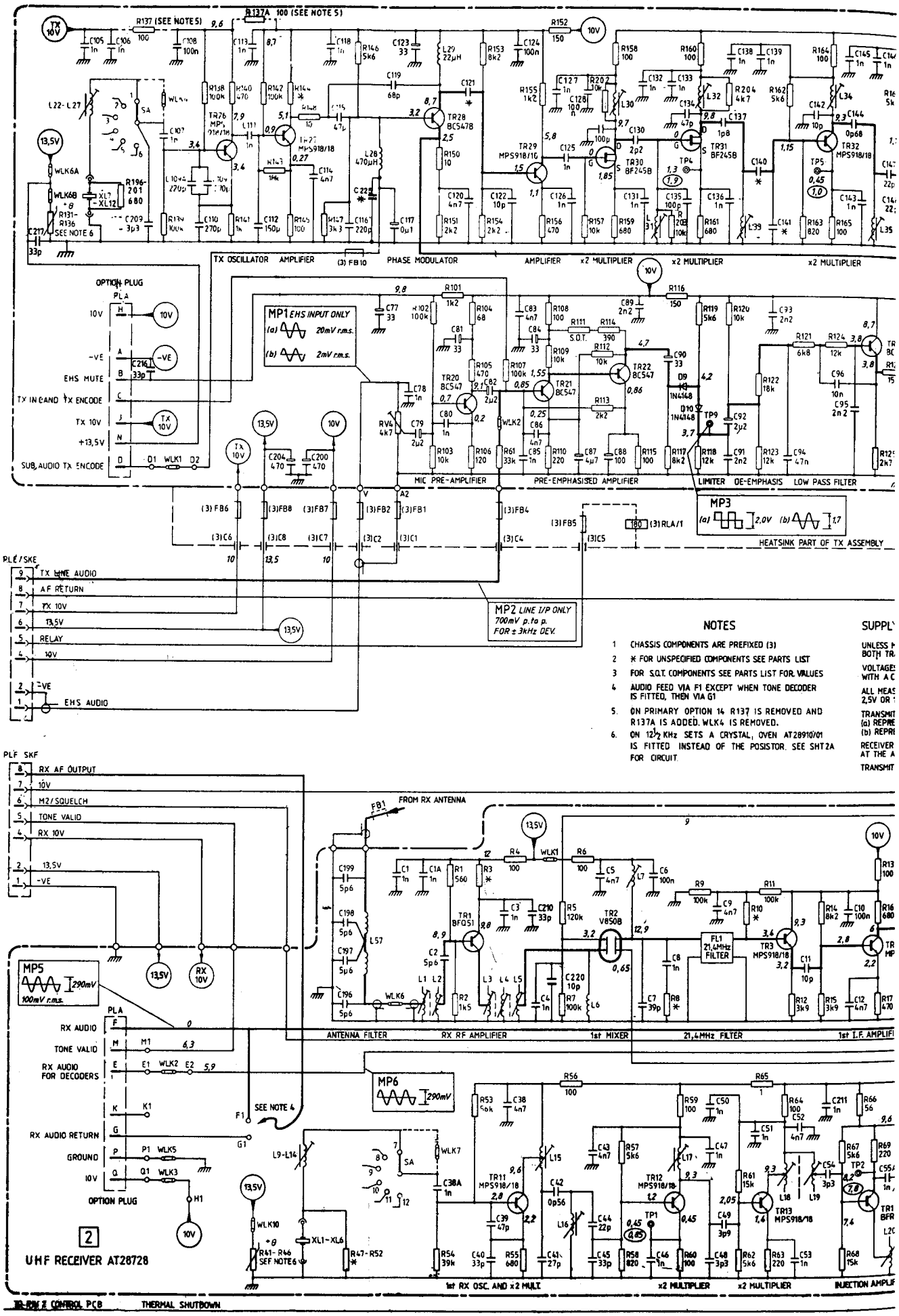

NOTES

1. CHASSIS COMPONENTS ARE PREFIXED (3)
2. * FOR UNSPECIFIED COMPONENTS SEE PARTS LIST
3. FOR S.O.T. COMPONENTS SEE PARTS LIST FOR VALUES
4. AUDIO FEED VIA F1 EXCEPT WHEN TONE DECODER IS FITTED, THEN VIA G1
5. ON PRIMARY OPTION 14 R137 IS REMOVED AND R137A IS ADDED. WLK4 IS REMOVED.
6. ON 12½ KHz SETS A CRYSTAL, OVEN AT28910/01 IS FITTED INSTEAD OF THE POSISTOR. SEE SHT2A FOR CIRCUIT.

SUPPL

UNLESS
BOTH TR
VOLTAGE
WITH A C
ALL MEAS
2,5V OR
TRANSMIT
(a) REPRE
(b) REPRE
RECEIVER
AT THE A
TRANSMIT

2

UHF RECEIVER AT28728

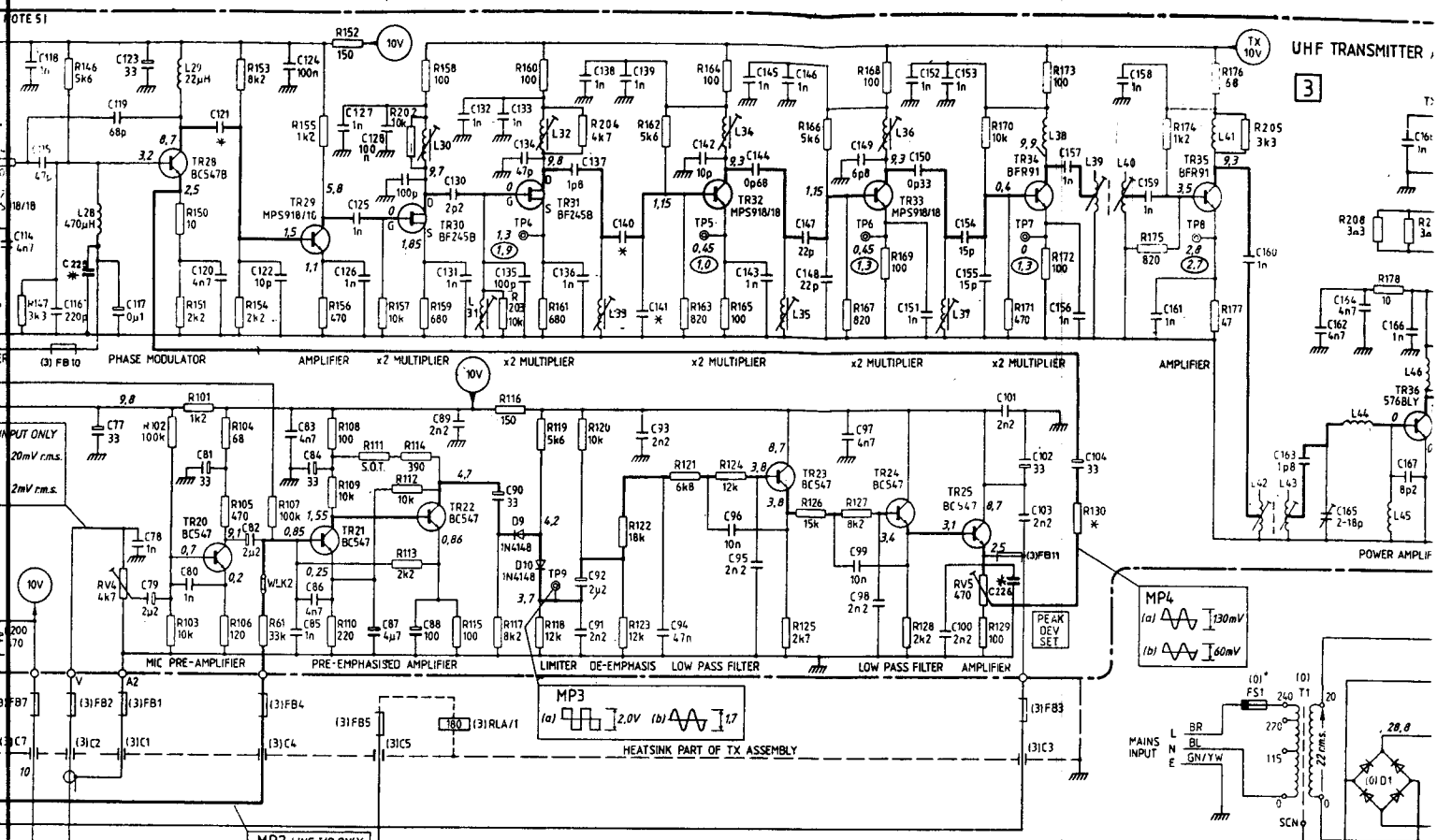

NOTES

1. CHASSIS COMPONENTS ARE PREFIXED (3)
2. * FOR UNSPECIFIED COMPONENTS SEE PARTS LIST
3. FOR S.O.T. COMPONENTS SEE PARTS LIST FOR VALUES
4. AUDIO FEED VIA F1 EXCEPT WHEN TONE DECODER IS FITTED, THEN VIA G1
5. ON PRIMARY OPTION 14 R137 IS REMOVED AND R137A IS ADDED. WLK4 IS REMOVED.
6. ON 12½ KHZ SETS A CRYSTAL, OVEN AT28910/01 IS FITTED INSTEAD OF THE POSISTOR. SEE SHT2A FOR CIRCUIT

MEASUREMENTS FOR 6W EQUIPMENT (25KHz)
SUPPLY VOLTS INCREASED TO 15V FOR 25W EQUIPMENT

UNLESS MARKED OTHERWISE, ALL VOLTAGES SHOWN ARE MEASURED WITH BOTH TRANSMITTER AND RECEIVER ENERGISED, BUT UNCRYSTALLED

VOLTAGES SHOWN THUS :— ◯ REPRESENT TYPICAL VALUES WHEN FITTED WITH A CHANNEL CRYSTAL, TUNED ACCORDING TO THE HANDBOOK

ALL MEASUREMENTS MADE WITH A 20kΩ/VOLT METER ON EITHER THE 2,5V OR 10V FSD RANGE AS APPROPRIATE

TRANSMITTER AUDIO MEASUREMENTS ARE SHOWN AT TWO LEVELS.
(a) REPRESENTS THE CLIPPED LEVEL SET FOR ± 5kHz DEVIATION
(b) REPRESENTS THE UNCLIPPED LEVEL SET FOR ± 3kHz DEVIATION

RECEIVER AUDIO MEASUREMENTS ARE SHOWN FOR 1mV RF SIGNAL LEVEL AT THE ANT SKT (3kHz DEVIATION)

TRANSMITTER AND RECEIVER AUDIO MEASUREMENTS AT 1kHz

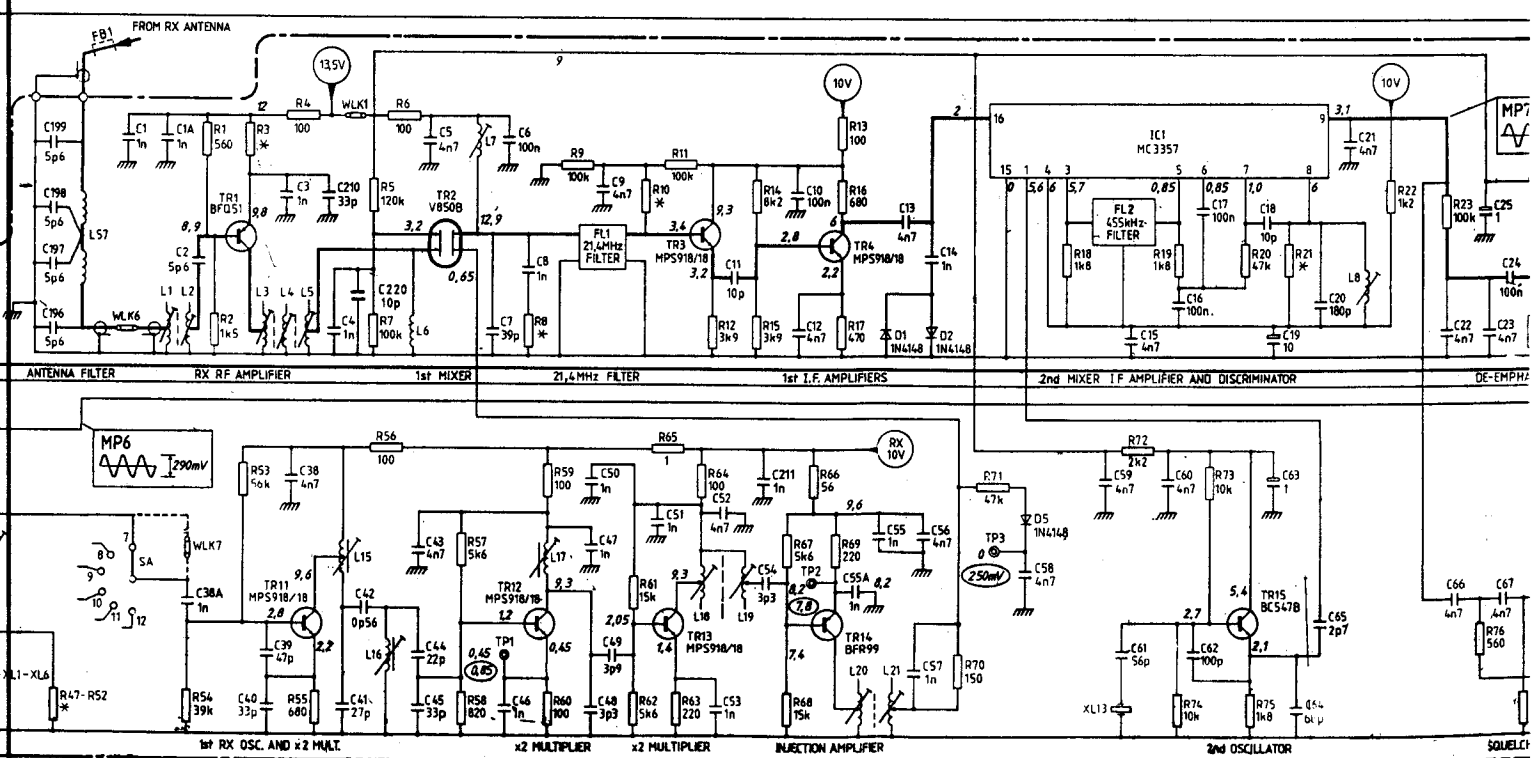

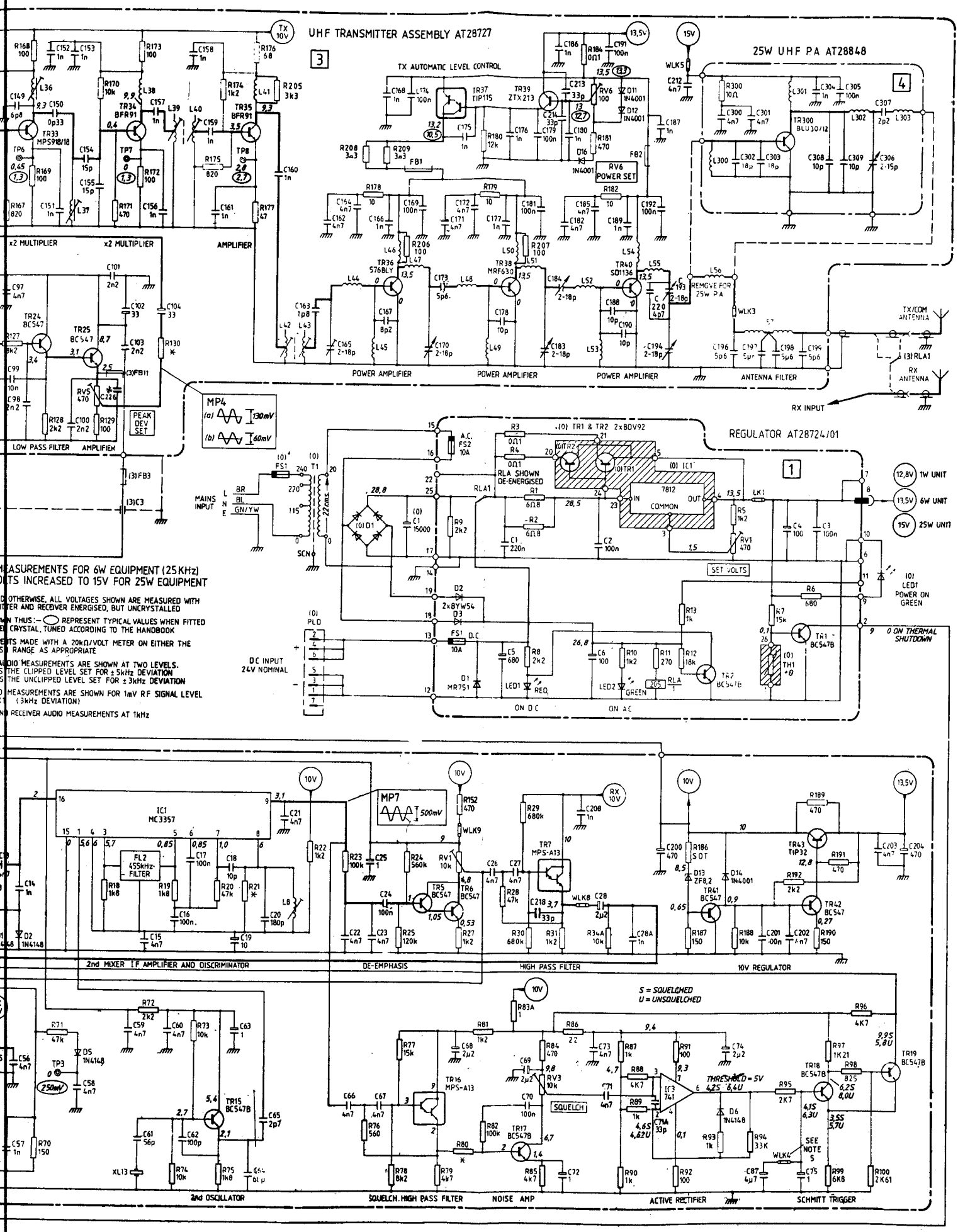

MEASUREMENTS FOR 6W EQUIPMENT (25 KHz)
OUTS INCREASED TO 15V FOR 25W EQUIPMENT

D OTHERWISE, ALL VOLTAGES SHOWN ARE MEASURED WITH ITTER AND RECEIVER ENERGISED, BUT UNCRYSTALLED

N THUS:- ◯ REPRESENT TYPICAL VALUES WHEN FITTED E CRYSTAL, TUNED ACCORDING TO THE HANDBOOK

ENTS MADE WITH A 20kΩ/VOLT METER ON EITHER THE 5) RANGE AS APPROPRIATE

UDIO MEASUREMENTS ARE SHOWN AT TWO LEVELS.
S THE CLIPPED LEVEL SET FOR ±5kHz DEVIATION
S THE UNCLIPPED LEVEL SET FOR ±3kHz DEVIATION

) MEASUREMENTS ARE SHOWN FOR 1mV R.F. SIGNAL LEVEL (3kHz DEVIATION)

N) RECEIVER AUDIO MEASUREMENTS AT 1kHz

FIG. 6.10 F496 – TRANSCEIVER CIRCUIT DIAGRAM

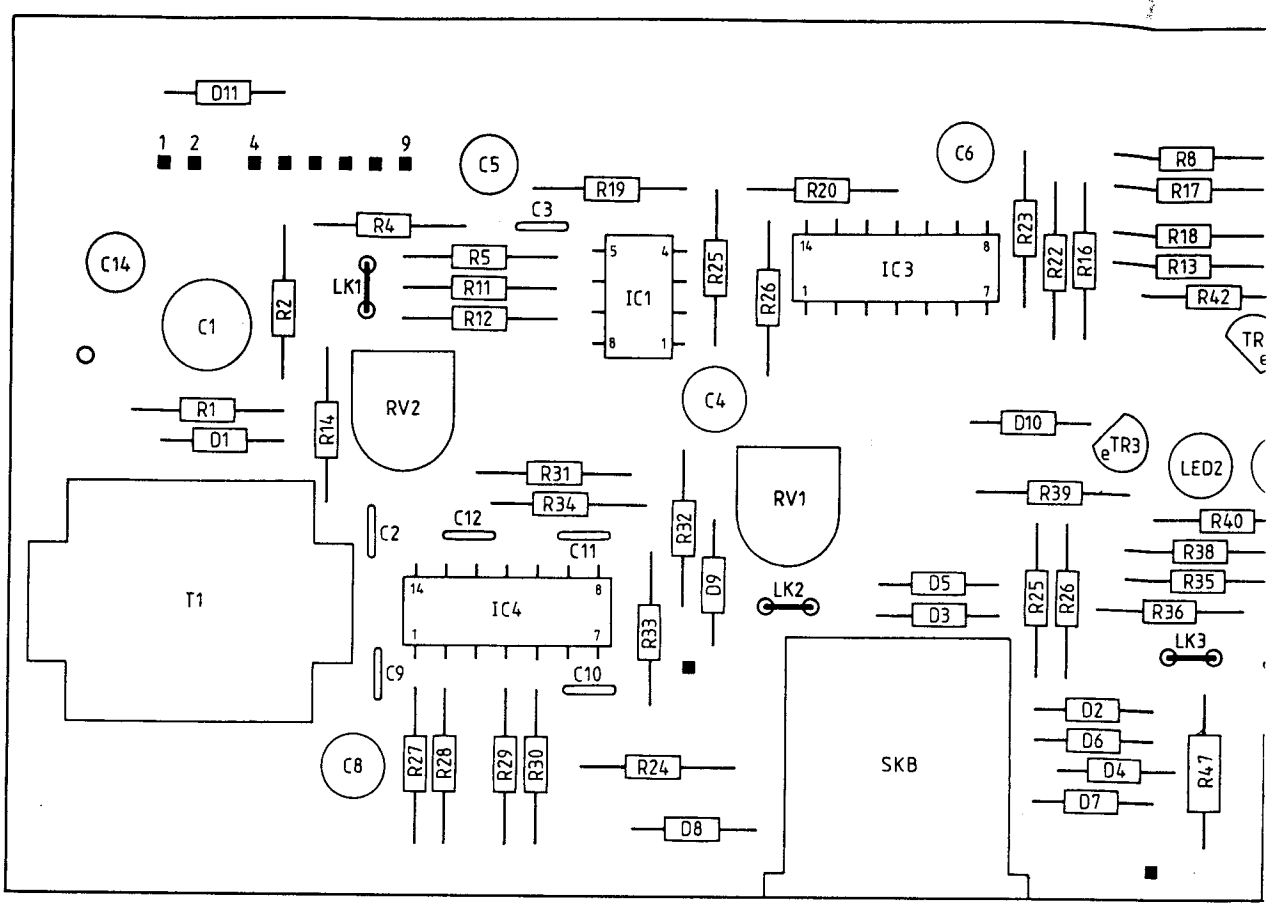
D11
1 2 4 9
C5
C6
R19
R20
R8
R17
R4
C3
R23
R22
R16
R18
R13
R42
C14
R5
R11
R12
IC1
R25
R26
IC3
LK1
R2
C1
TR
RV2
C4
R1
D1
R14
D10
TR3
LED2
R31
R34
RV1
R39
R40
C2
C12
C11
R32
D9
R38
R35
T1
IC4
LK2
D5
D3
R25
R26
R36
R33
LK3
C9
C10
D2
D6
D4
R47
C8
R27
R28
R29
R30
R24
SKB
D7
D8

AT28725/01

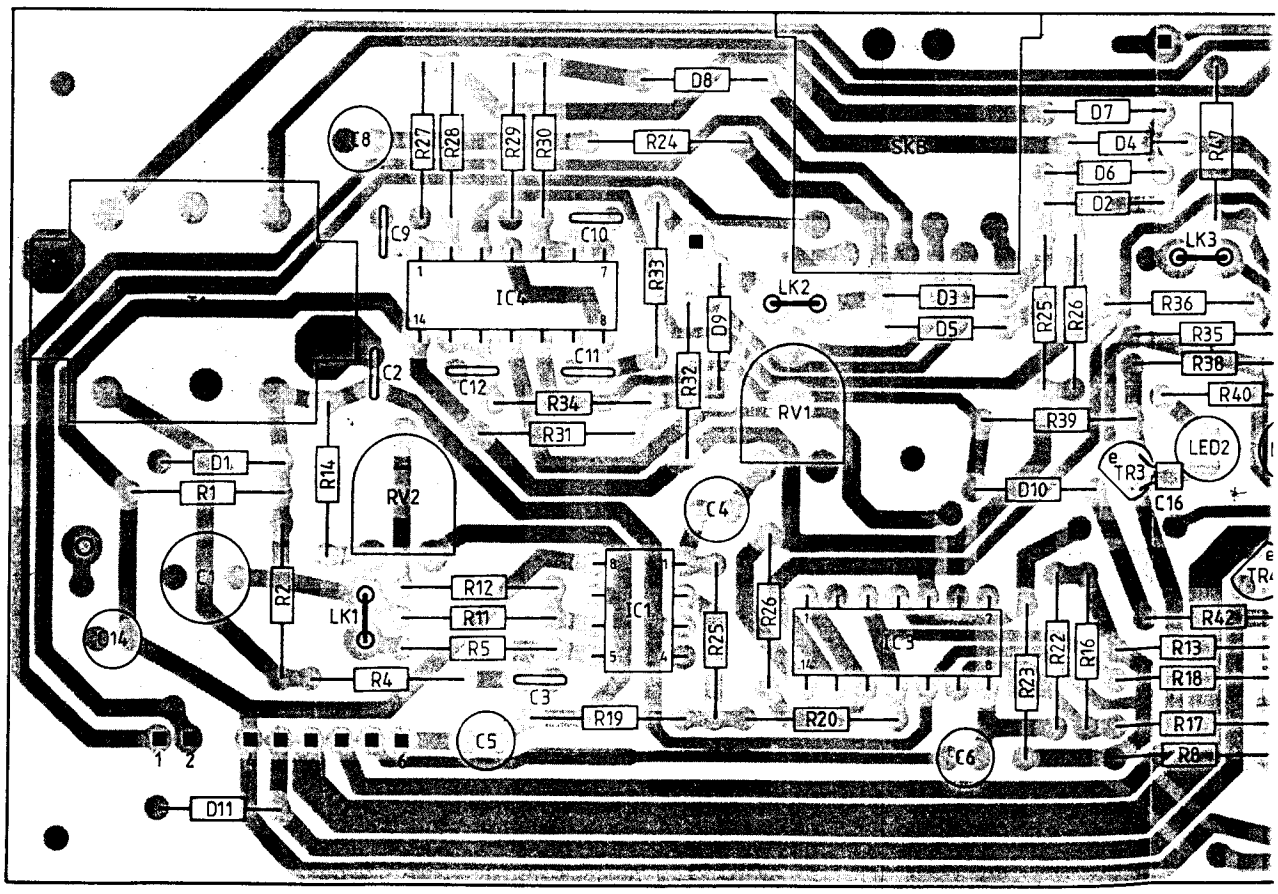
D8
D7
R27
R28
R29
R30
R24
SKB
D4
R47
C8
D6
D2
C9
C10
LK3
IC4
R33
LK2
D3
R36
D9
D5
R25
R26
R35
C11
R38
C2
C12
R32
R34
RV1
R40
R31
R39
LED2
D1
R14
TR3
R1
RV2
D10
C16
C4
R2
R12
IC1
R26
LK1
R11
R25
IC3
R42
C1
R5
R22
R16
R13
R4
R23
R18
C3
R19
R20
R17
C5
C6
R8
1 2
D11

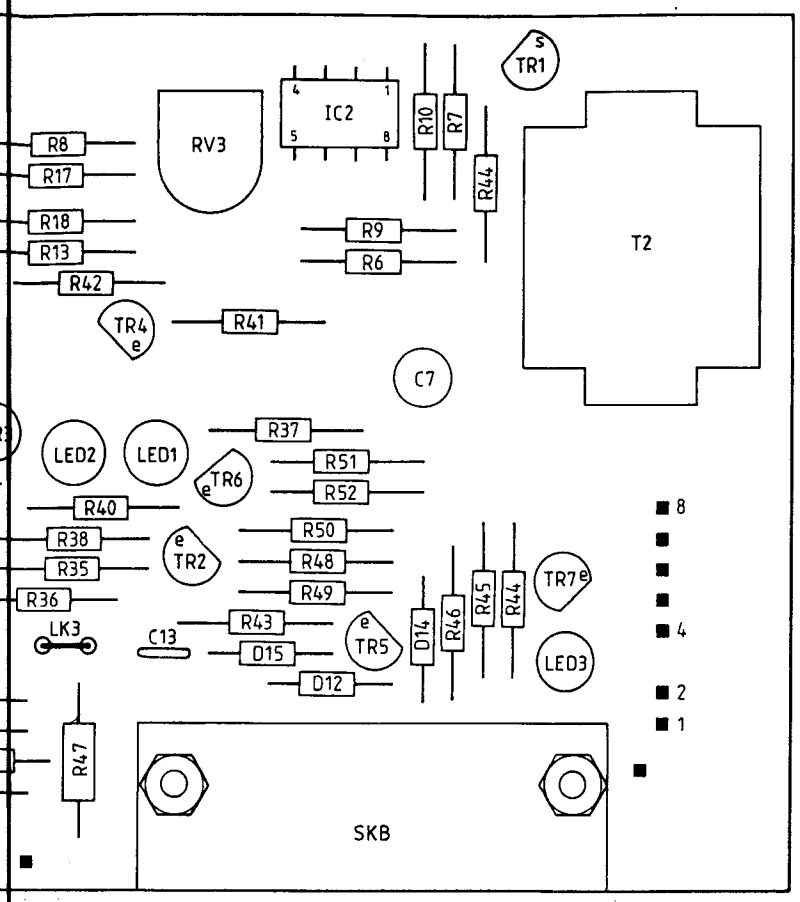

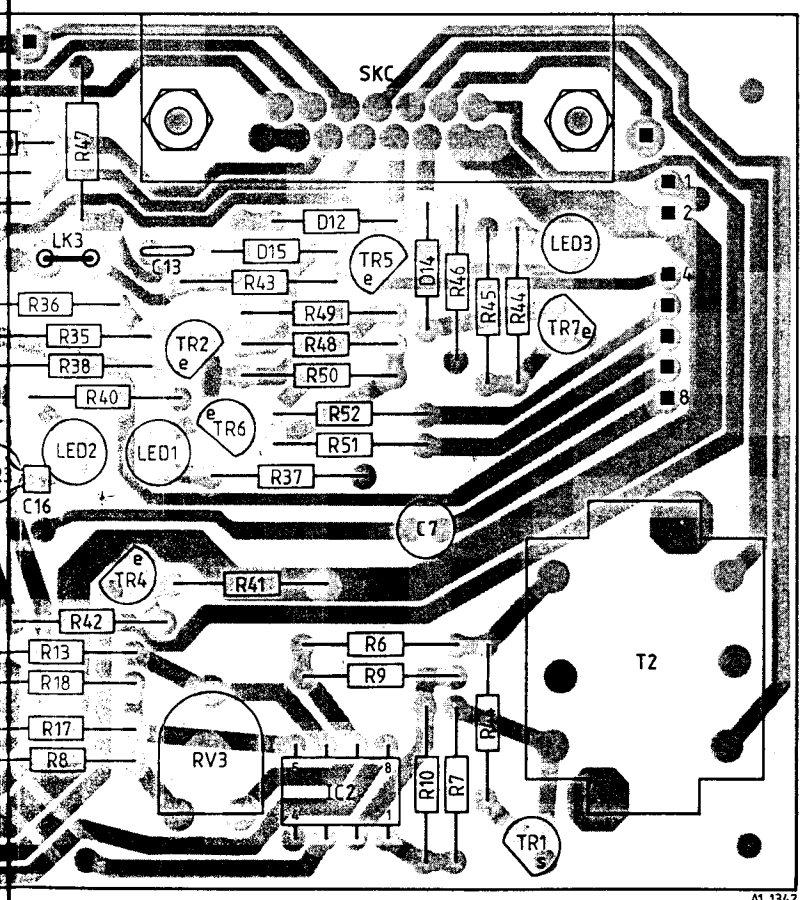

For Service Manuals Contact
MAURITRON TECHNICAL SERVICES
8 Cherry Tree Rd, Chinnor
Oxon OX9 4QY
Tel:- 01844-351694 Fax:- 01844-352554
Email:- enquiries@mauritron.co.uk

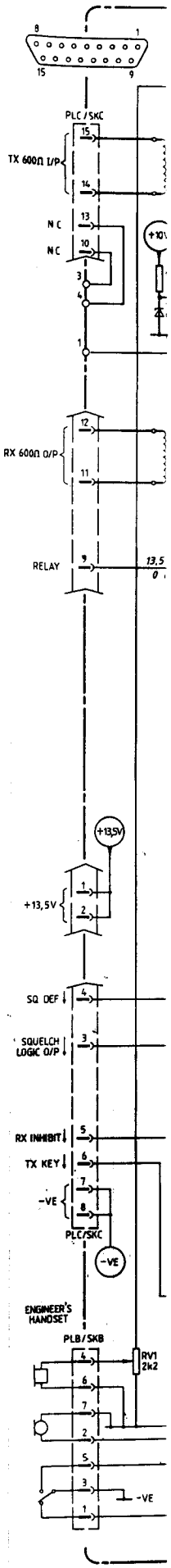

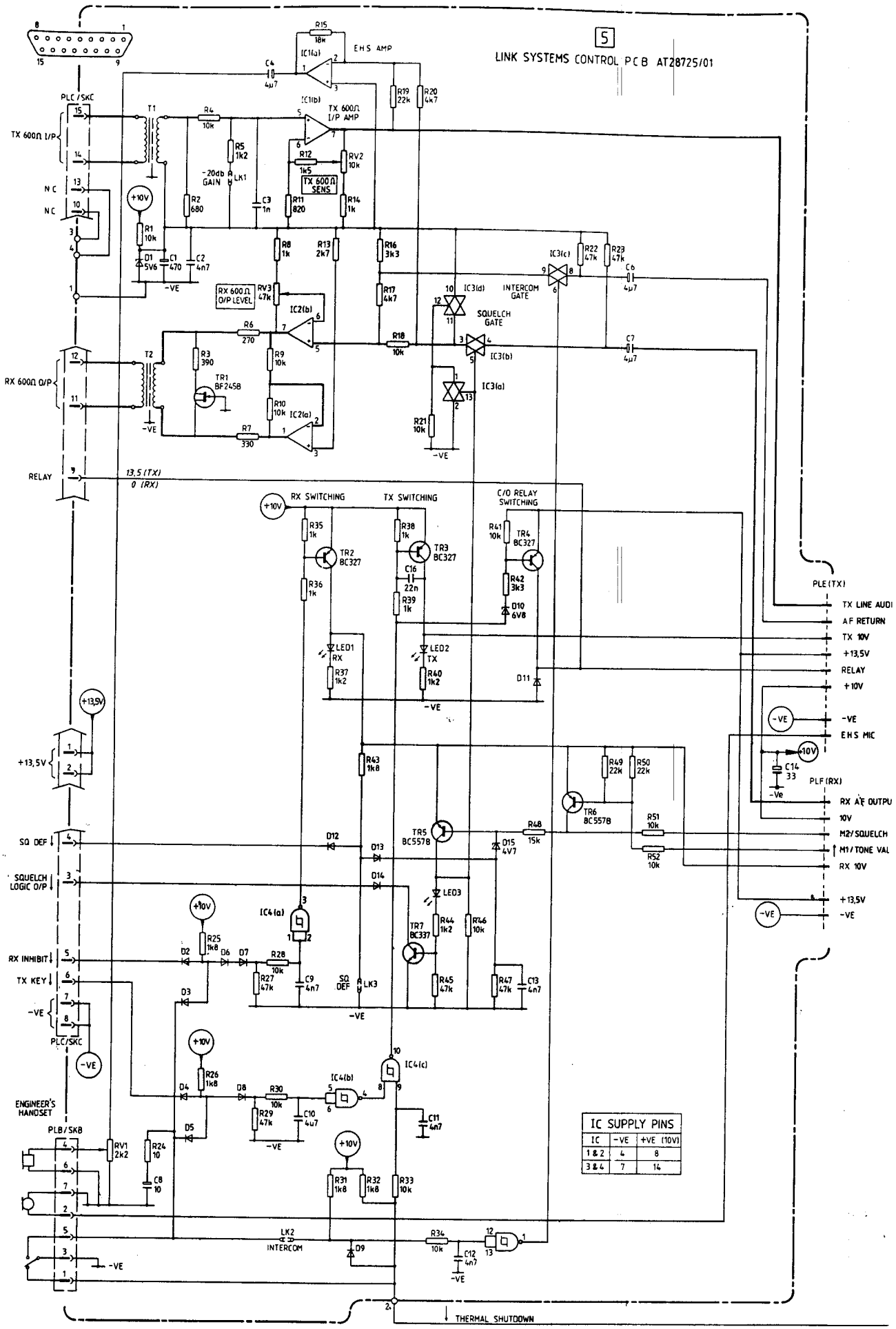

FIG. 1 AT28725/01
CIRCUIT & LAYOUT DIAGRAM

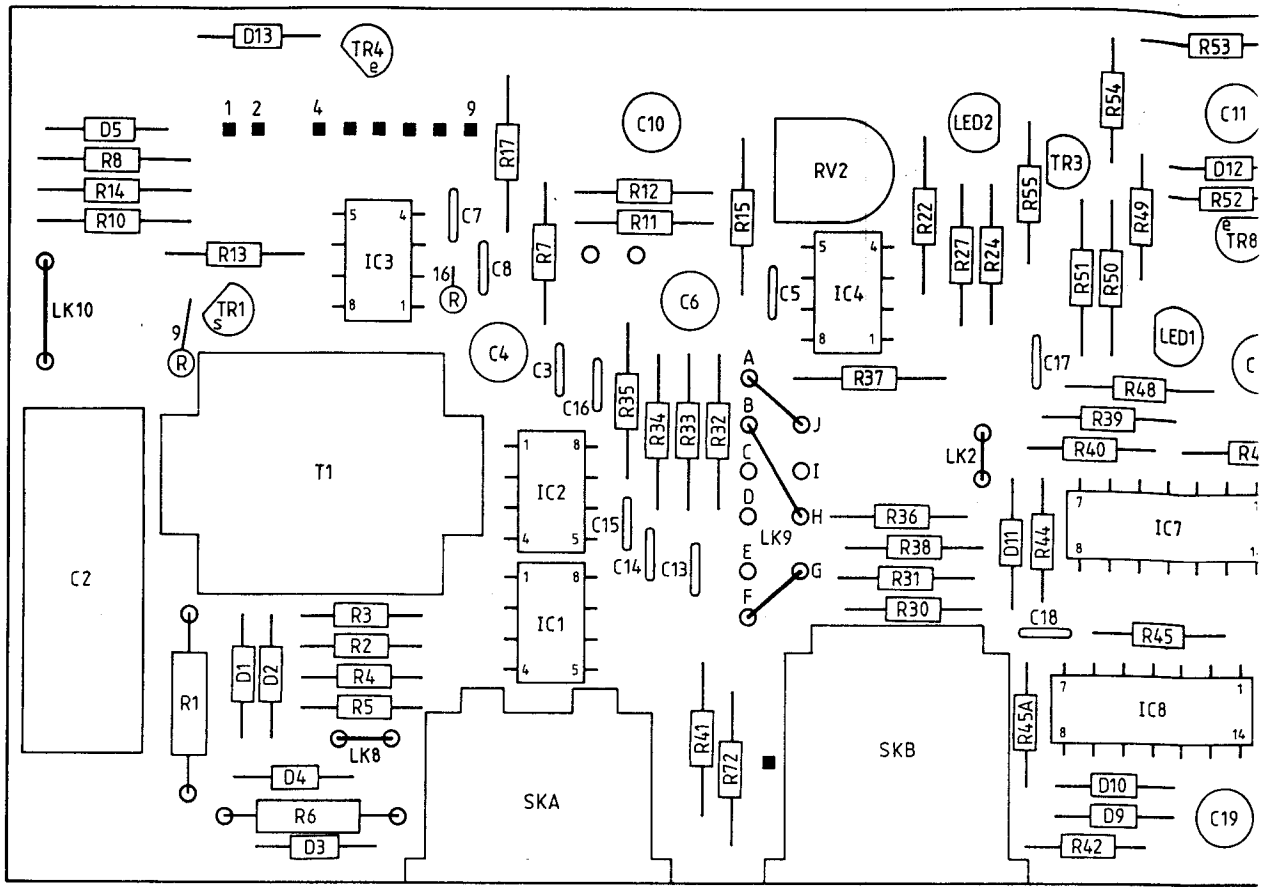
D13
TR4
R53
D5
R8
R14
R10
R17
C10
LED2
R54
C11
RV2
R22
R55
TR3
D12
R52
R12
R11
R15
R27
R24
R49
TR8
R13
IC3
C7
C8
R7
IC4
R51
R50
LK10
TR1
C6
C5
LED1
C4
C3
C16
R35
R34
R33
R32
R37
C17
R48
R39
T1
IC2
LK2
R40
C15
C14
C13
LK9
R36
R38
D11
R44
IC7
C2
IC1
R31
R30
C18
R45
R3
R2
R4
R5
R1
D1
D2
LK8
R41
R72
SKB
R45A
IC8
D4
SKA
D10
R6
D9
C19
D3
R42

AT28726/01

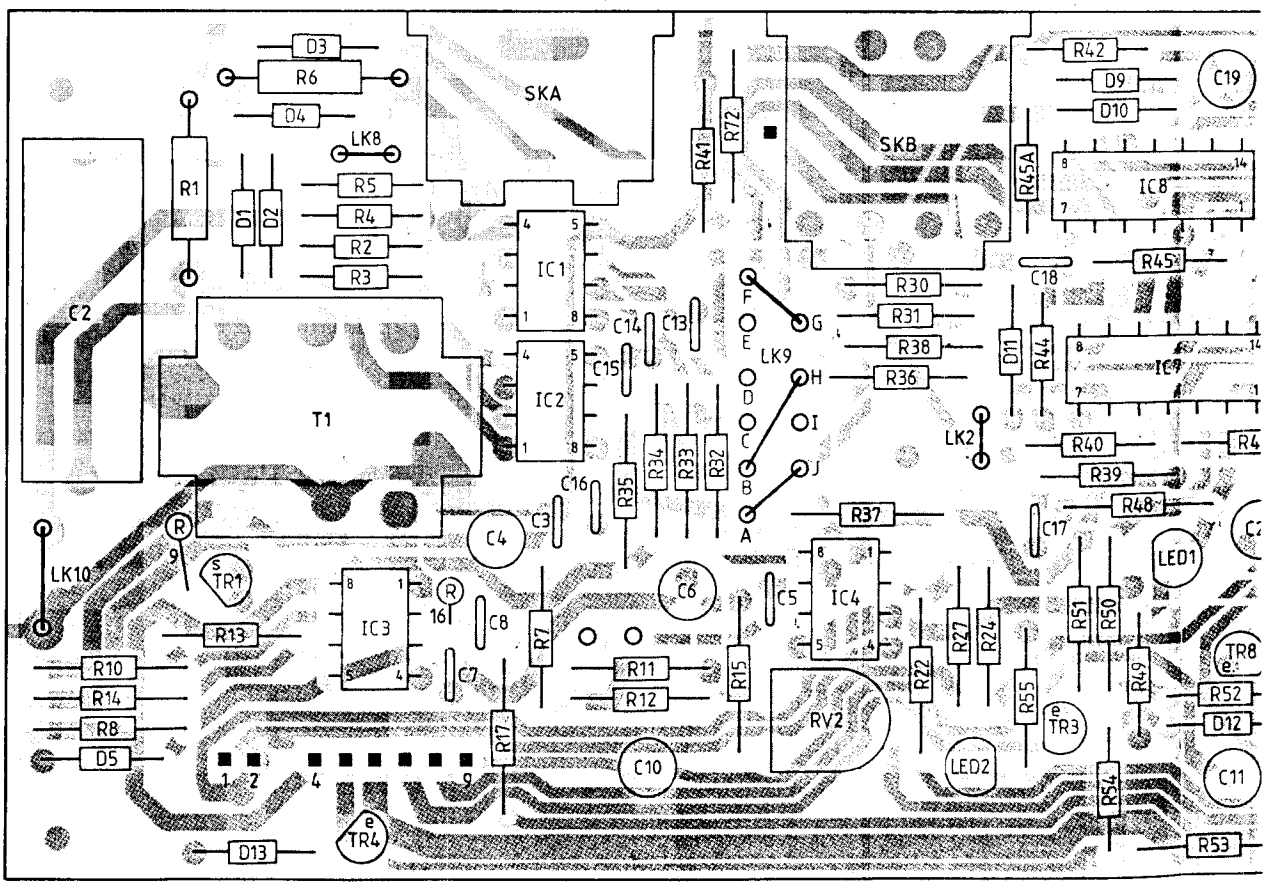
D3
R6
D4
SKA
R42
D9
D10
C19
LK8
R41
R72
SKB
R45A
IC8
R1
D1
D2
R5
R4
R2
R3
IC1
C18
R45
C2
R30
R31
R38
R36
D11
R44
IC9
C14
C13
C15
LK9
IC2
T1
LK2
R40
R39
R34
R33
R32
R35
C16
R48
R37
C4
C3
C17
LED1
LK10
TR1
IC3
C6
C5
IC4
R51
R50
R13
C8
R7
R27
R24
R22
R15
R11
R12
R10
C7
R55
R49
TR8
R52
R14
R8
RV2
TR3
D12
R17
C10
LED2
C11
D5
R54
TR4
D13
R53

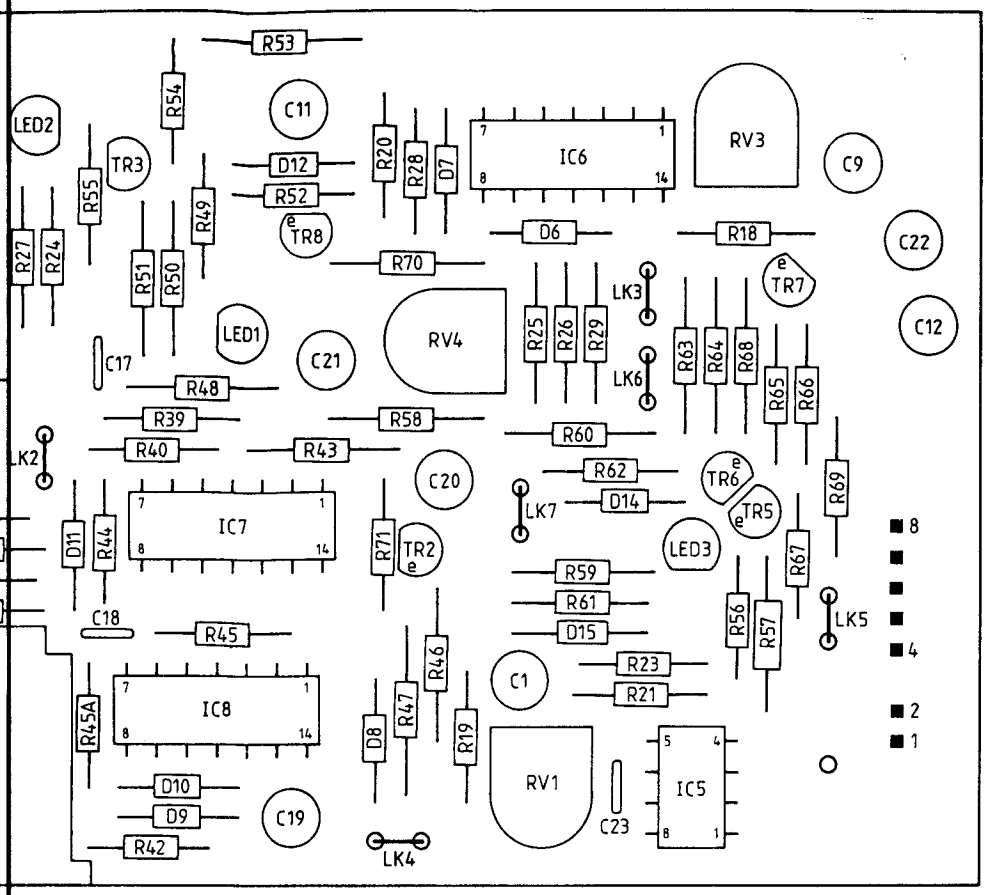

2B726/01

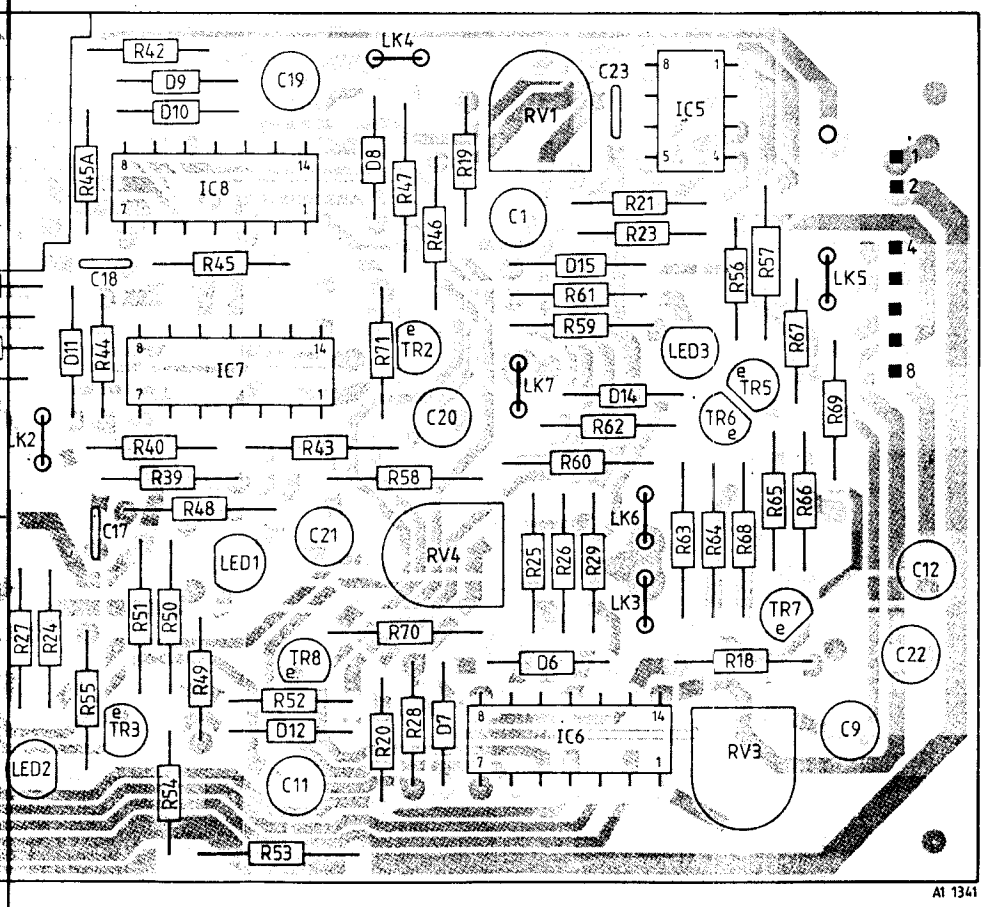

A1 1341

For Service Manuals Contact
MAURITRON TECHNICAL SERVICES
8 Cherry Tree Rd, Chinnor
Oxon OX9 4QY
Tel:- 01844-351694 Fax:- 01844-352554
Email:- enquiries@mauritron.co.uk

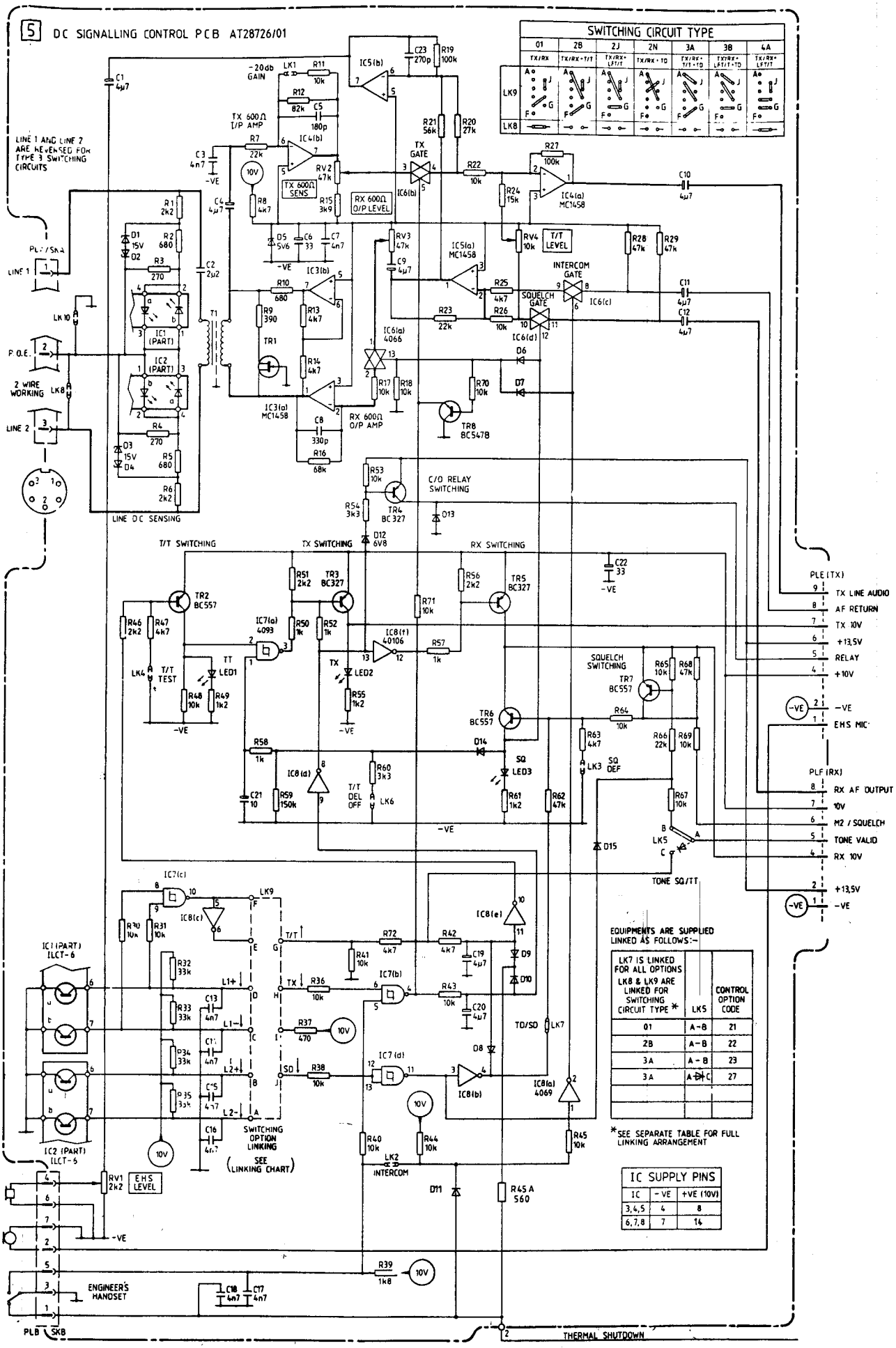

FIG. 2 AT28726/01
CIRCUIT & LAYOUT DIAGRAM

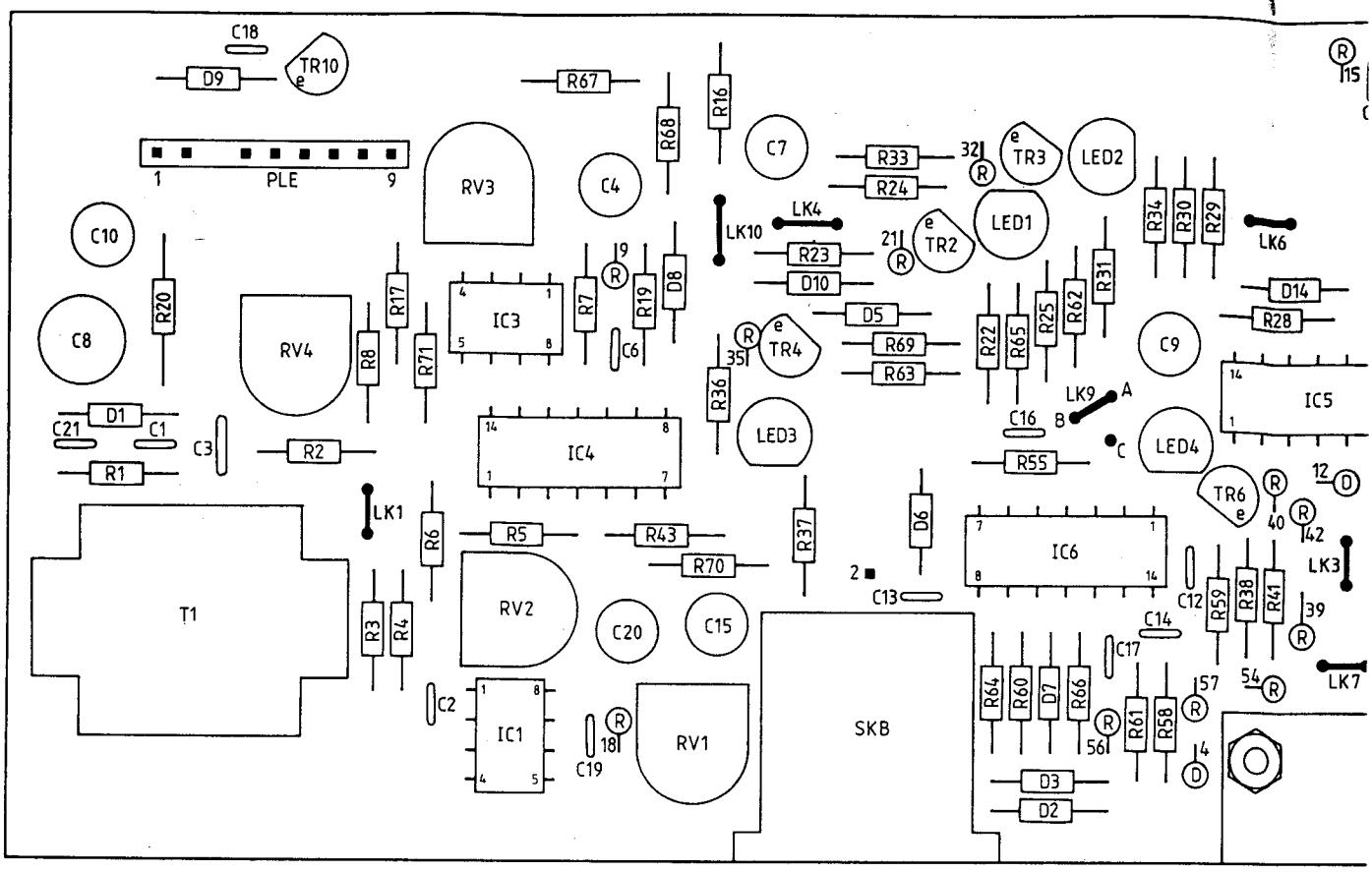
C18
TR10
D9
R67
R16
R68
C7
R33
R24
TR3
LED2
PLE
RV3
C4
LK4
LK10
TR2
LED1
R34
R30
R29
LK6
C10
R23
D10
D14
R28
R20
R17
IC3
R7
R19
D8
D5
R22
R65
R25
R62
R31
C8
RV4
R8
R71
C6
TR4
R69
R63
C9
R36
LK9
IC5
D1
C21
C1
C3
R2
IC4
LED3
C16
LED4
R1
R55
TR6
LK1
R6
R5
R43
R37
D6
IC6
R70
LK3
T1
RV2
C20
C15
C13
C12
R59
R38
R41
C14
C17
R3
R4
R64
R60
D7
R66
R61
R58
LK7
C2
IC1
C19
RV1
SKB
D3
D2

AT28817

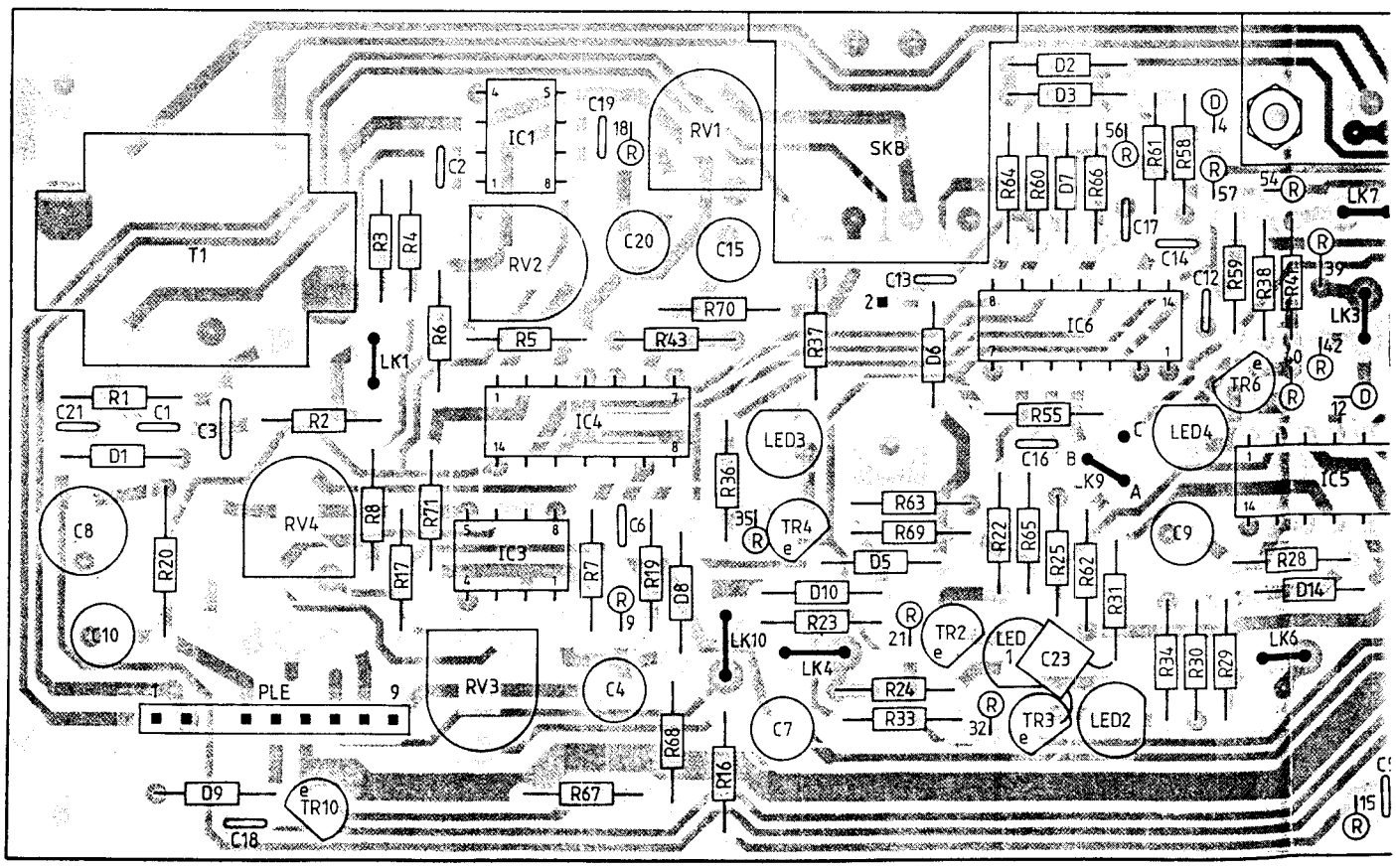
D2
D3
IC1
C19
RV1
SKB
R64
R60
D7
R66
R61
R58
LK7
C2
T1
R3
R4
RV2
C20
C15
C17
C14
R59
R38
R41
C13
R70
IC6
LK3
R6
R5
R43
R37
D6
LK1
TR6
R1
C21
C1
C3
R2
IC4
R55
LED4
D1
LED3
C16
R36
IC5
C8
RV4
R8
R71
C6
TR4
R63
R69
R22
R65
R25
R62
C9
R20
R17
IC3
R7
R19
D8
D5
R28
D14
D10
R23
TR2
LED 1
C23
R31
C10
LK10
LK4
R34
R30
R29
LK6
PLE
RV3
C4
R24
R33
TR3
LED2
C7
R68
R16
D9
TR10
R67
C18

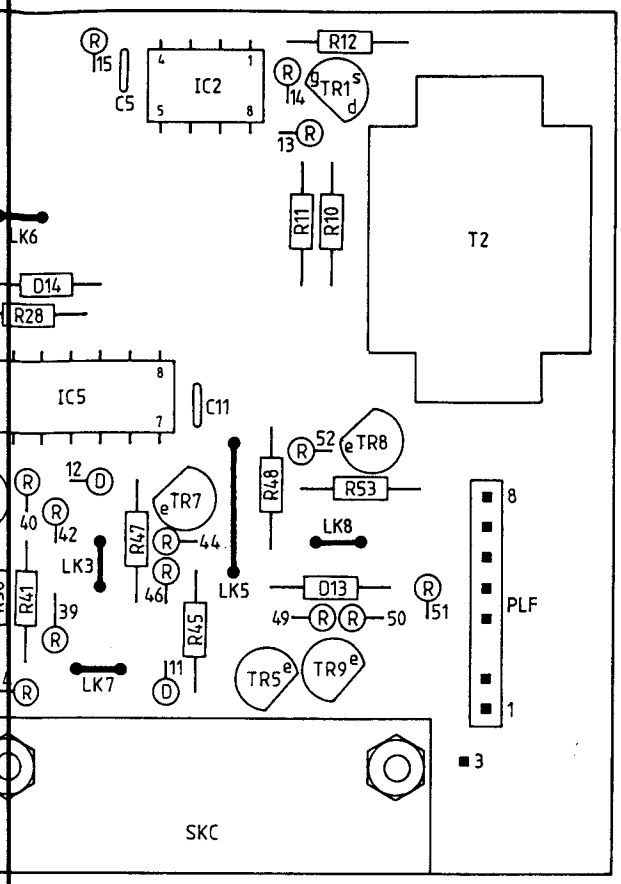
IC2
C5
R12
TR1
T2
R11
R10
LK6
D14
R28
IC5
C11
TR8
R53
R48
TR7
R47
LK3
LK8
LK5
D13
R41
R45
PLF
TR5
TR9
LK7
SKC

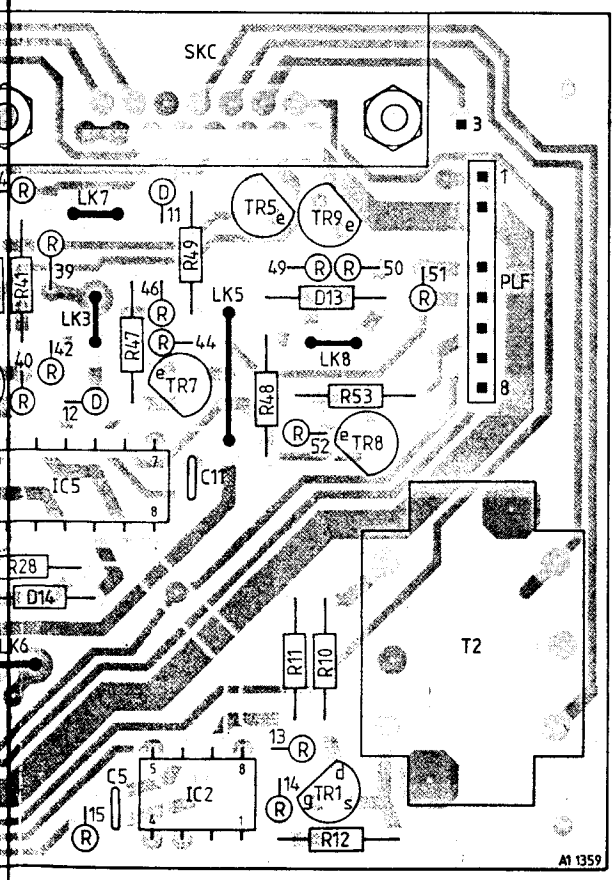
SKC
LK7
TR5
TR9
R49
R41
LK3
R47
LK5
D13
PLF
LK8
TR7
R48
R53
TR8
IC5
C11
R28
D14
LK6
T2
R11
R10
C5
IC2
TR1
R12
A1 1359

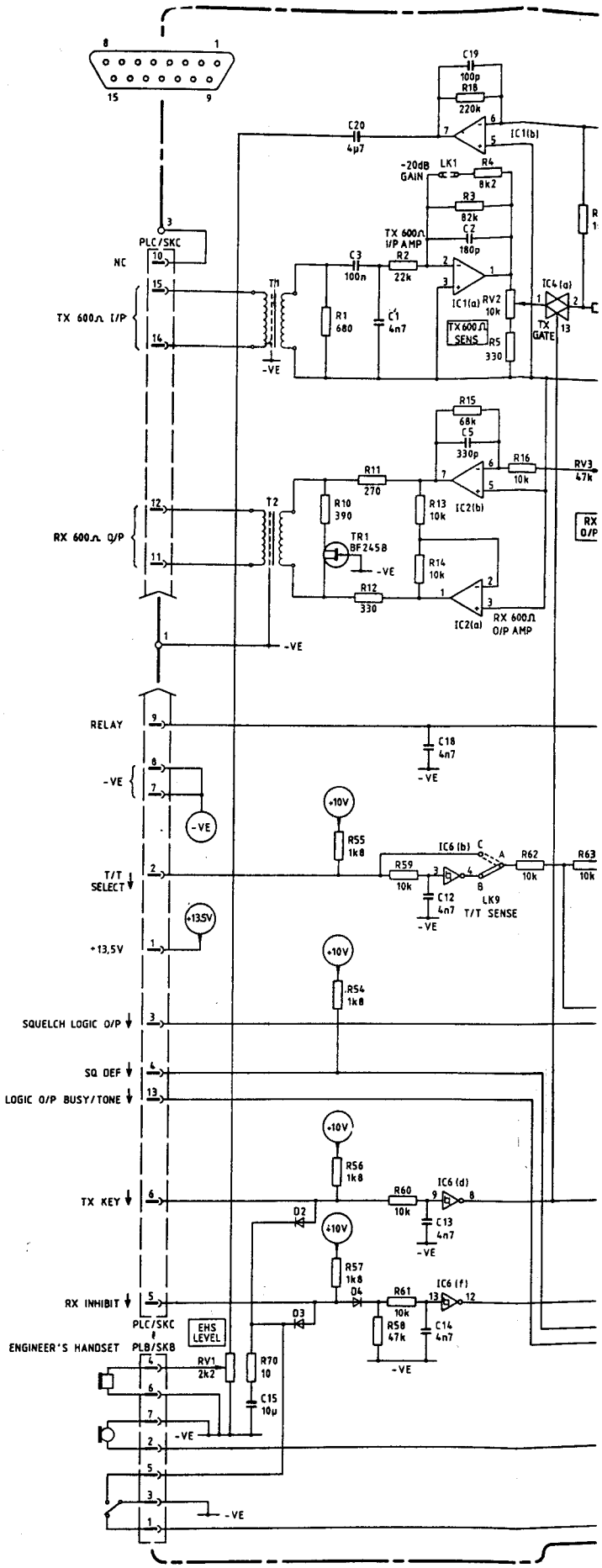
C19
100p
R18
220k
C20
4µ7
IC1(b)
-20dB GAIN
LK1
R4
8k2
R3
82k
C2
180p
TX 600Ω I/P AMP
PLC/SKC
NC
C3
100n
R2
22k
TX 600Ω I/P
T1
R1
680
C1
4n7
IC1(a)
RV2
10k
TX 600Ω SENS
R5
330
IC4(a)
TX GATE
-VE
R15
68k
C5
330p
R16
10k
RV3
47k
R11
270
IC2(b)
RX 600Ω O/P
T2
R10
390
R13
10k
TR1
BF245B
R14
10k
R12
330
IC2(a)
RX 600Ω O/P AMP
RELAY
C18
4n7
T/T SELECT
+13,5V
+10V
R55
1k8
IC6(b)
R59
10k
C12
4n7
R62
10k
R63
10k
LK9
T/T SENSE
+13,5V
R54
1k8
SQUELCH LOGIC O/P
SQ DEF
LOGIC O/P BUSY/TONE
R56
1k8
TX KEY
R60
10k
IC6(d)
C13
4n7
D2
R57
1k8
D4
RX INHIBIT
R61
10k
IC6(f)
D3
R58
47k
C14
4n7
PLC/SKC
ENGINEER'S HANDSET
PLB/SKB
EHS LEVEL
RV1
2k2
R70
10
C15
10µ

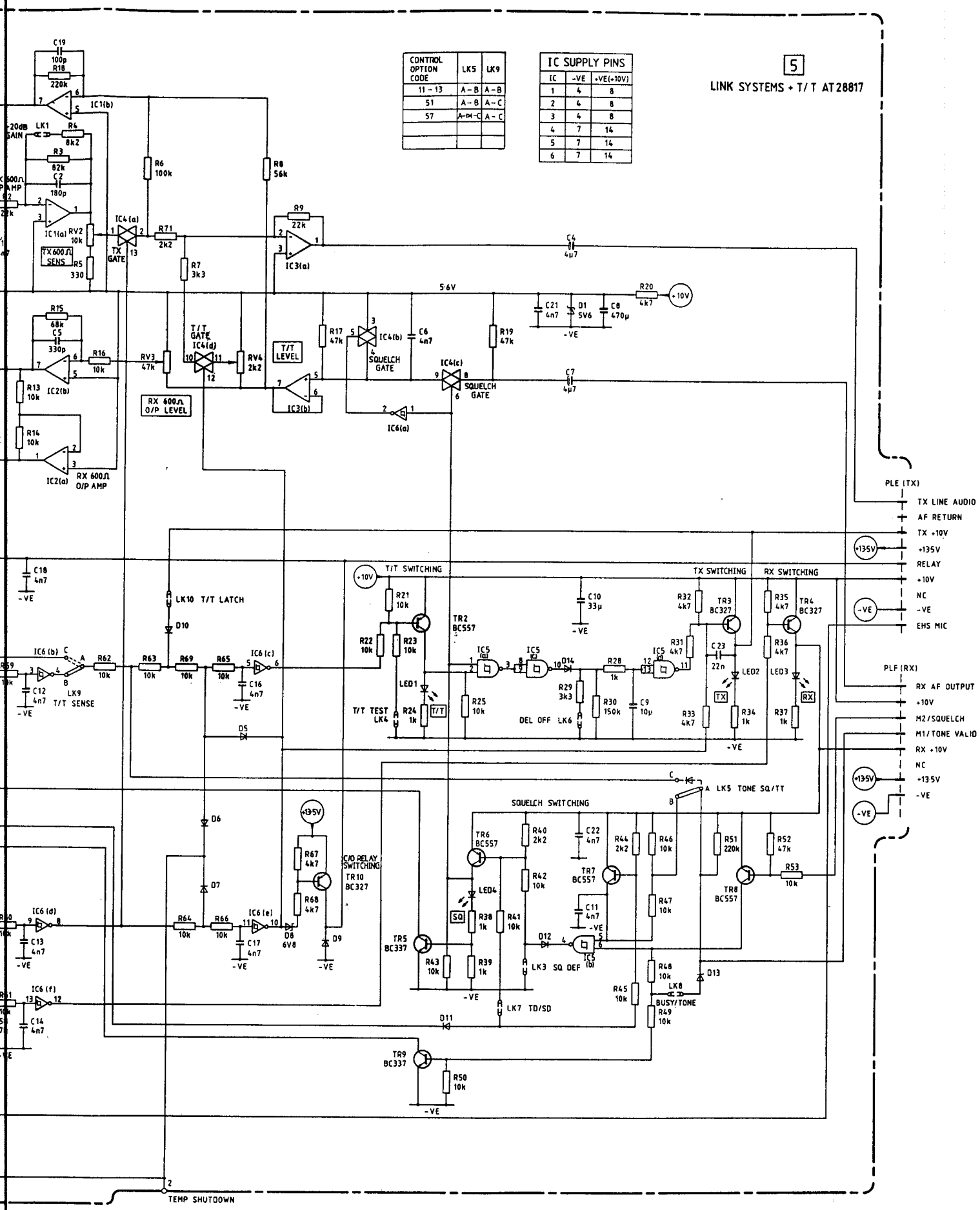

FIG. 3 AT28817
CIRCUIT & LAYOUT DIAGRAM

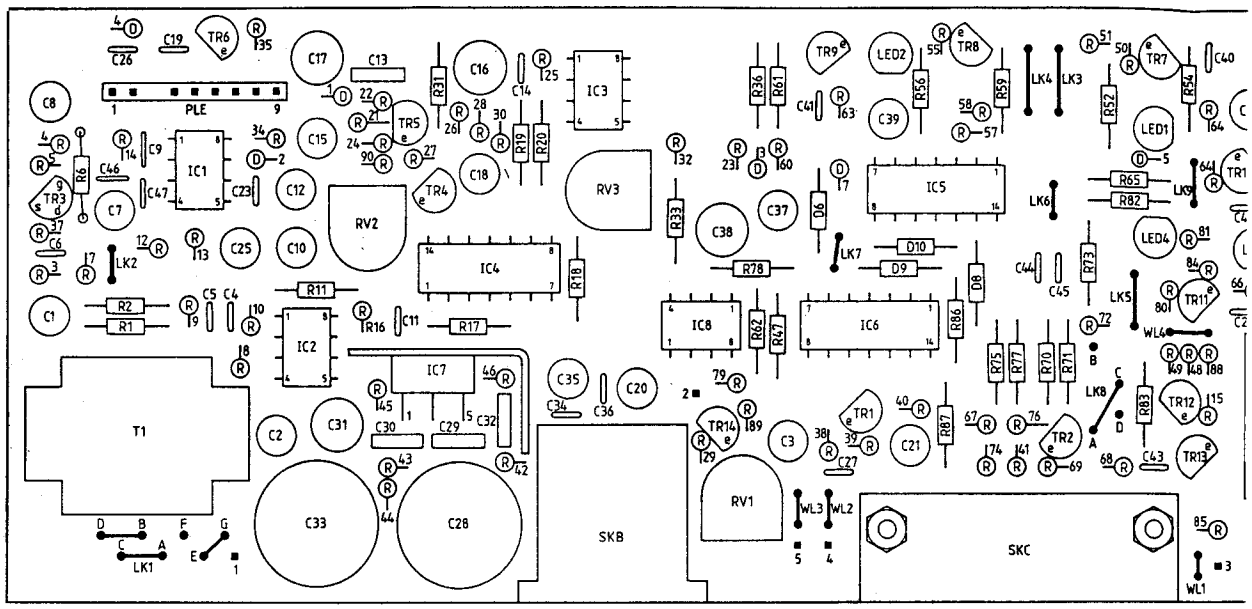

AT28824

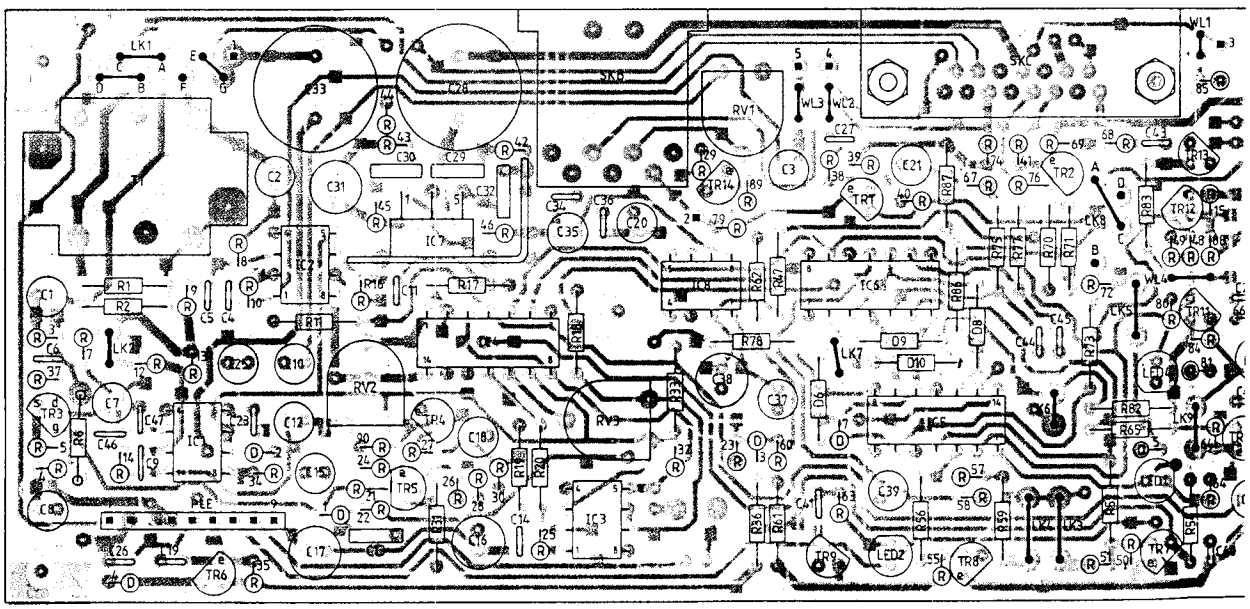

For Service Manuals Contact
MAURITRON TECHNICAL SERVICES
8 Cherry Tree Rd, Chinnor
Oxon OX9 4QY
Tel:- 01844-351694 Fax:- 01844-352554
Email:- enquiries@mauritron.co.uk

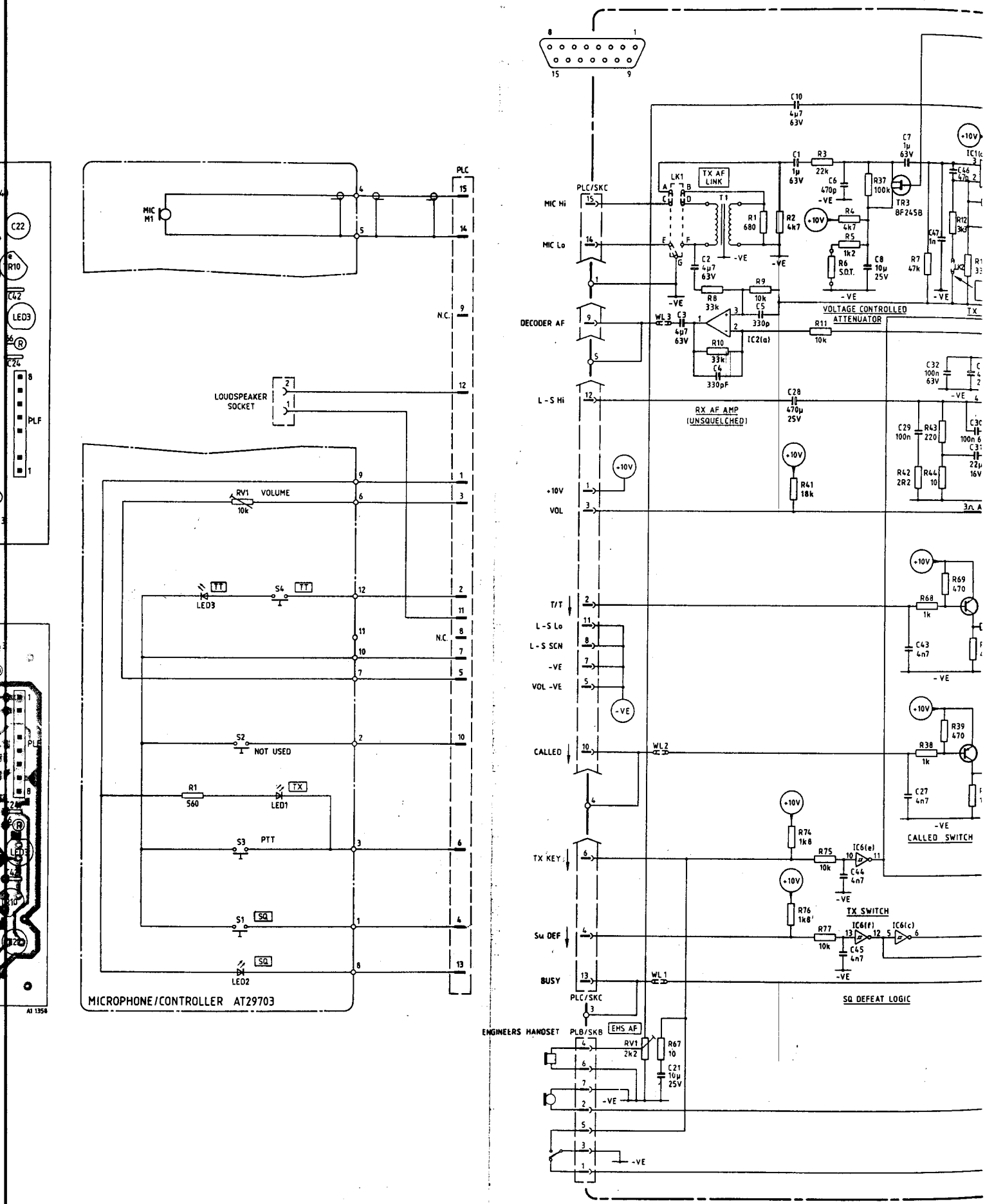
MIC M1
PLC
LOUDSPEAKER SOCKET
RV1 VOLUME 10k
LED3
S4
S2 NOT USED
R1 560
LED1
S3 PTT
S1
LED2
MICROPHONE/CONTROLLER AT29703
PLC/SKC
MIC Hi
MIC Lo
DECODER AF
L-S Hi
+10V
VOL
T/T
L-S Lo
L-S SCN
-VE
VOL -VE
CALLED
TX KEY
Sw DEF
BUSY
PLC/SKC
ENGINEERS HANDSET
PLB/SKB
EHS AF
RV1 2k2
R67 10
C21 10µ 25V
TX AF LINK
LK1
RX AF AMP (UNSQUELCHED)
VOLTAGE CONTROLLED ATTENUATOR
IC2(a)
TR3 BF245B
CALLED SWITCH
TX SWITCH
SQ DEFEAT LOGIC
IC6(e)
IC6(f)
IC6(c)

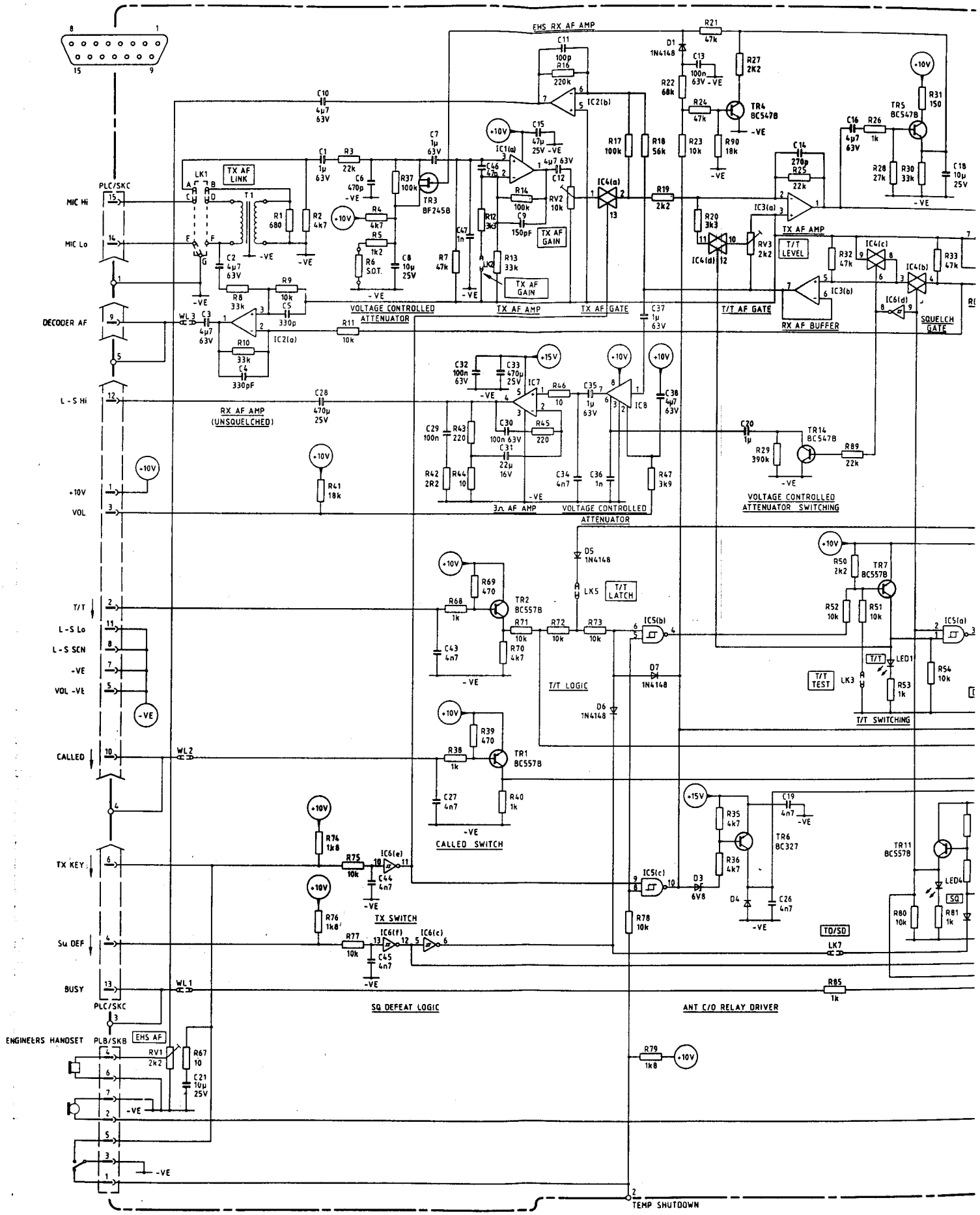
EHS RX AF AMP
TX AF LINK
TX AF GAIN
TX AF AMP
TX AF GATE
VOLTAGE CONTROLLED ATTENUATOR
T/T AF GATE
T/T LEVEL
RX AF BUFFER
SQUELCH GATE
RX AF AMP (UNSQUELCHED)
3Ω AF AMP
VOLTAGE CONTROLLED ATTENUATOR
VOLTAGE CONTROLLED ATTENUATOR SWITCHING
T/T LATCH
T/T LOGIC
T/T TEST
T/T SWITCHING
CALLED SWITCH
TX SWITCH
SQ DEFEAT LOGIC
ANT C/O RELAY DRIVER
TO/SD
SQ
EHS AF
ENGINEERS HANDSET
PLC/SKC
PLB/SKB
MIC Hi
MIC Lo
DECODER AF
L-S Hi
+10V
VOL
T/T
L-S Lo
L-S SCN
-VE
VOL -VE
CALLED
TX KEY
Su DEF
BUSY
TEMP SHUTDOWN

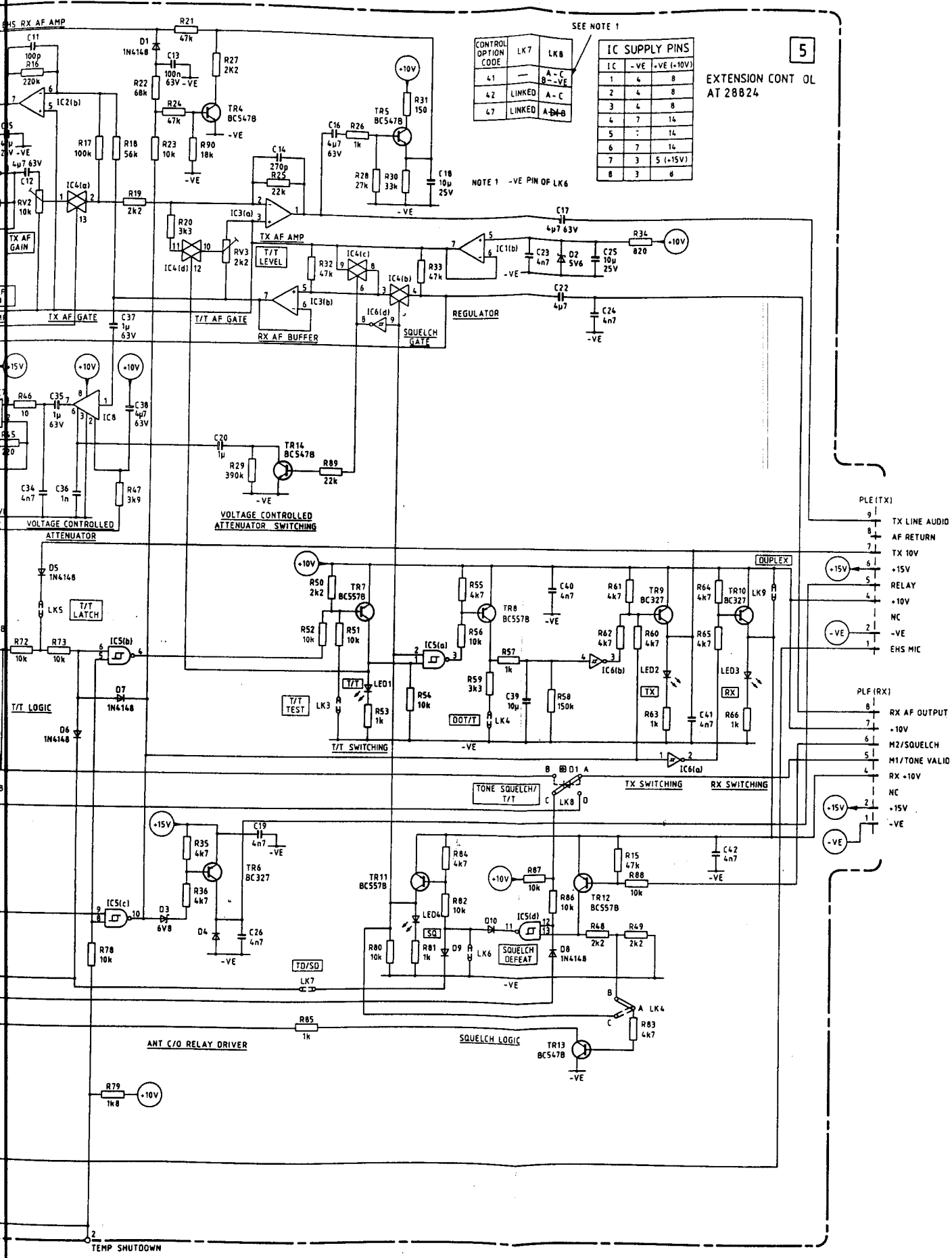

FIG. 4 AT28824
CIRCUIT & LAYOUT DIAGRAM

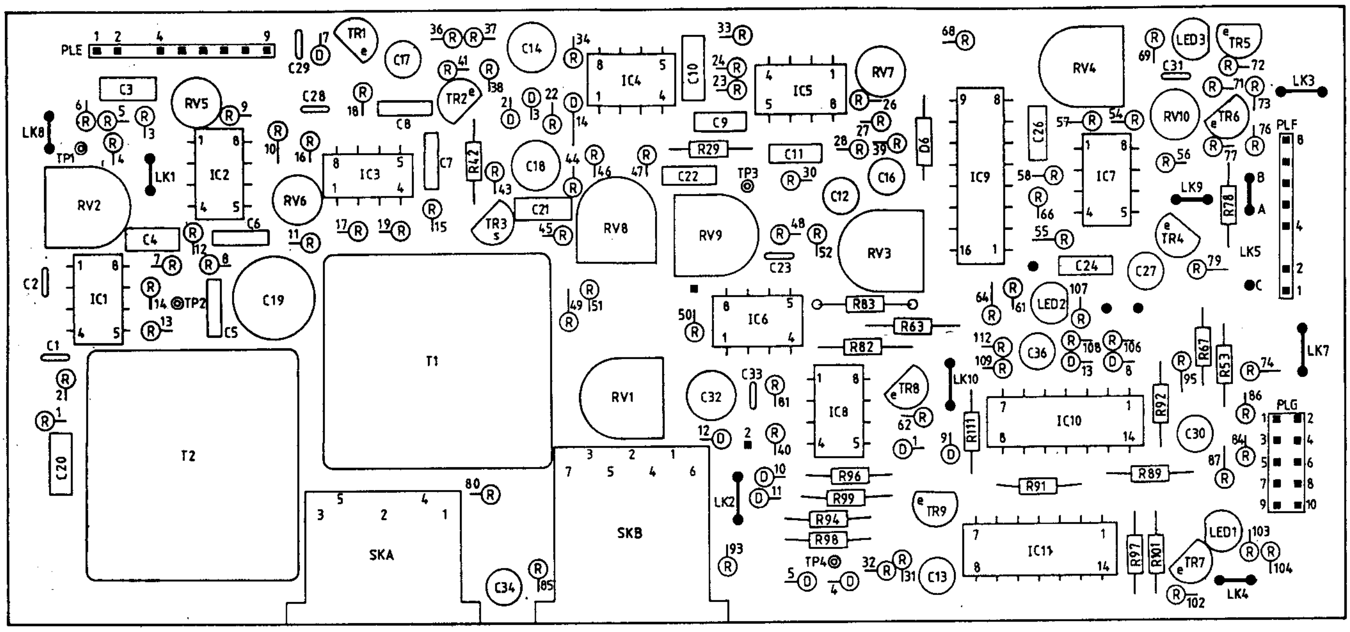

AT28829

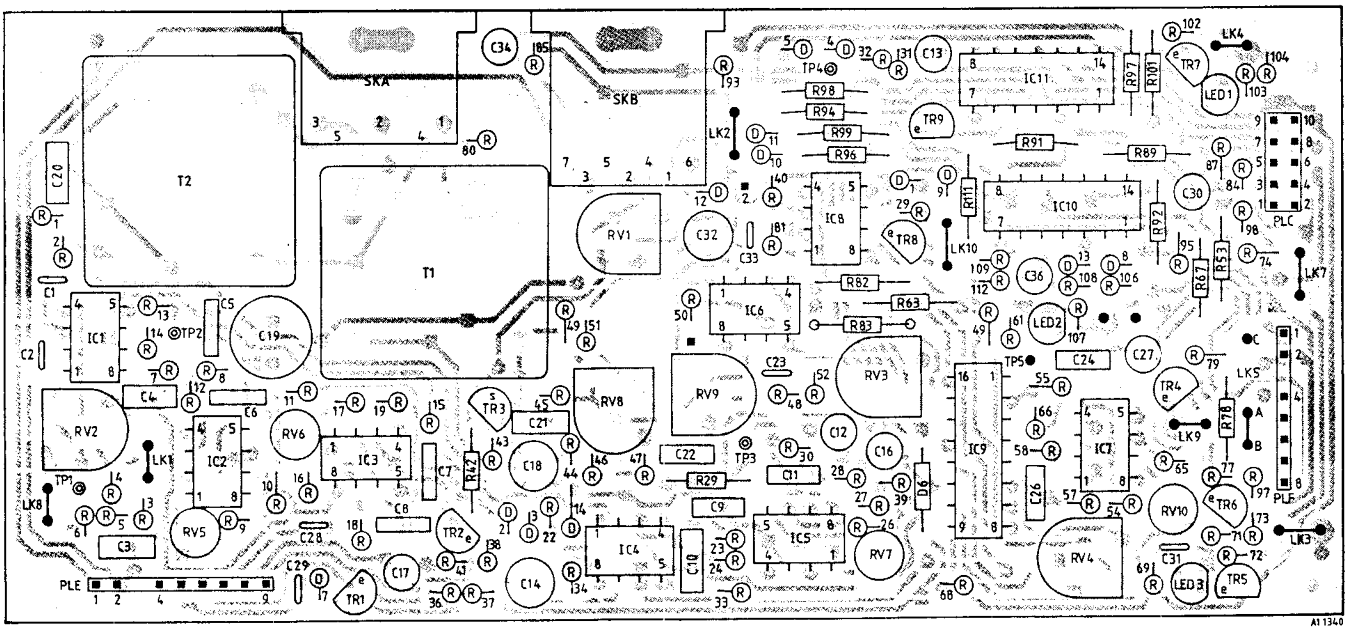

A1 1340

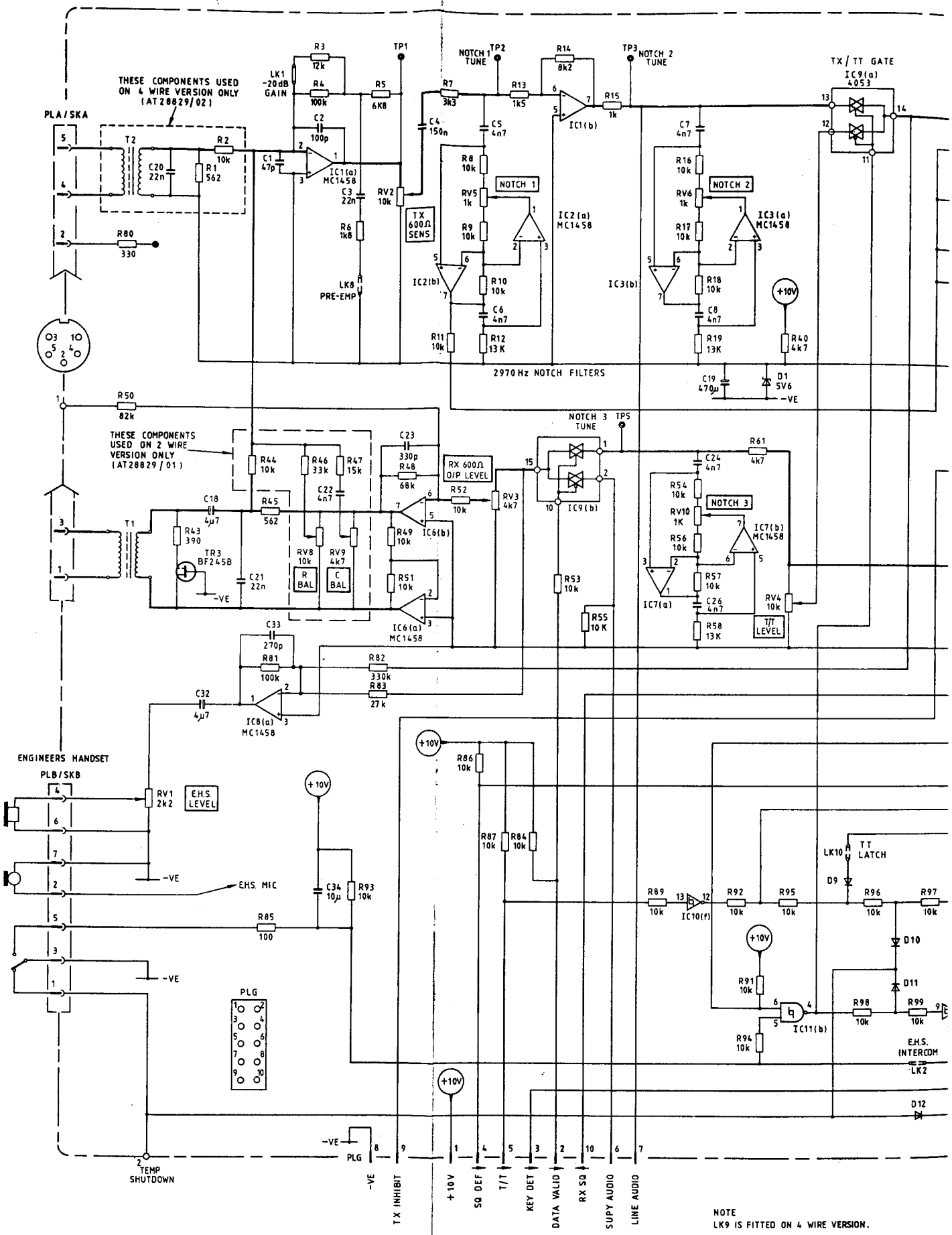

NOTE
LK9 IS FITTED ON 4 WIRE VERSION.

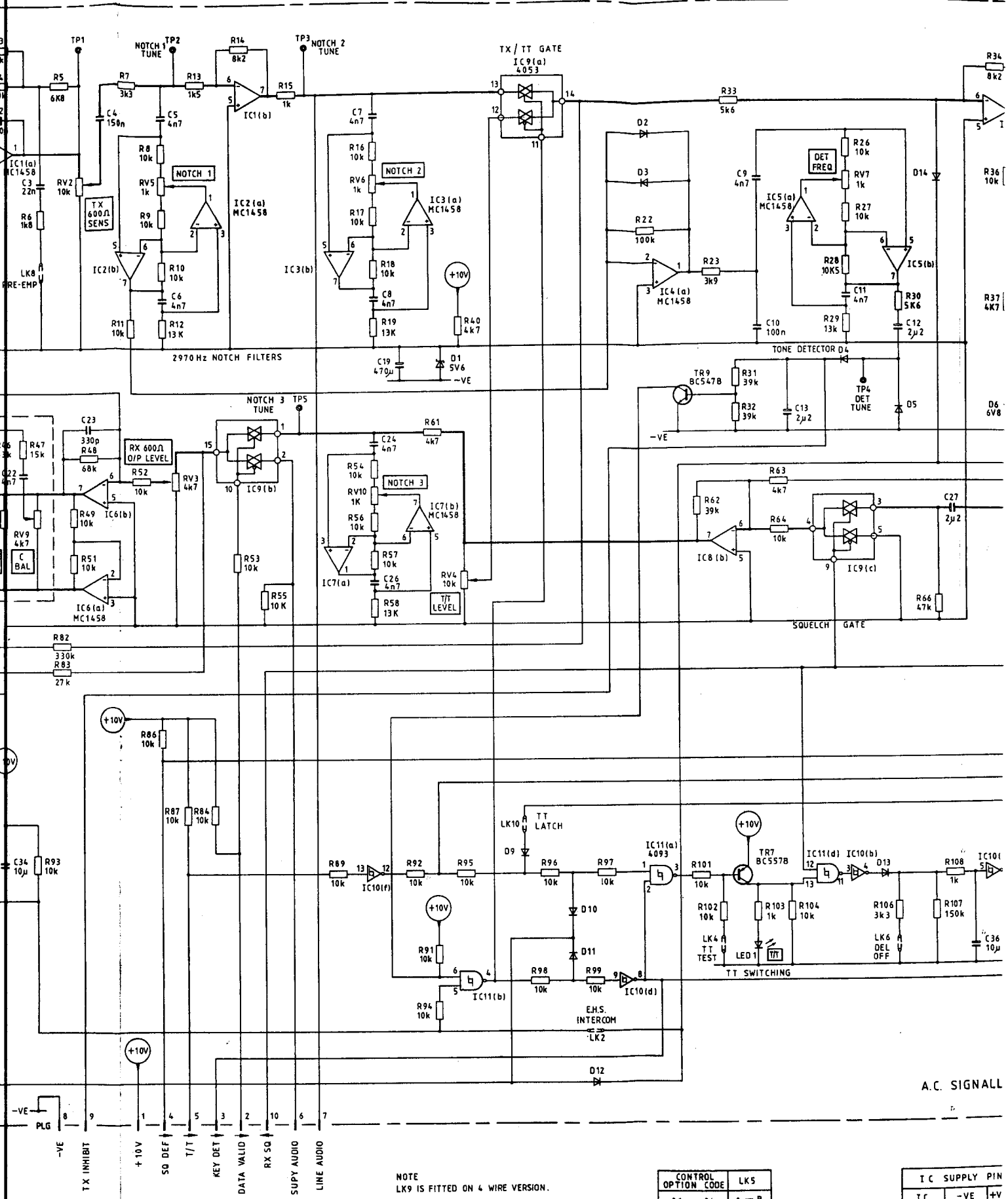

NOTE
LK9 IS FITTED ON 4 WIRE VERSION.

CONTROL OPTION CODE	LK5
31 — 34	A — B
35 — 38	A — C

IC	SUPPLY PIN	
IC	-VE	+V
1 - 8	4	
9	8	
10, 11	7	

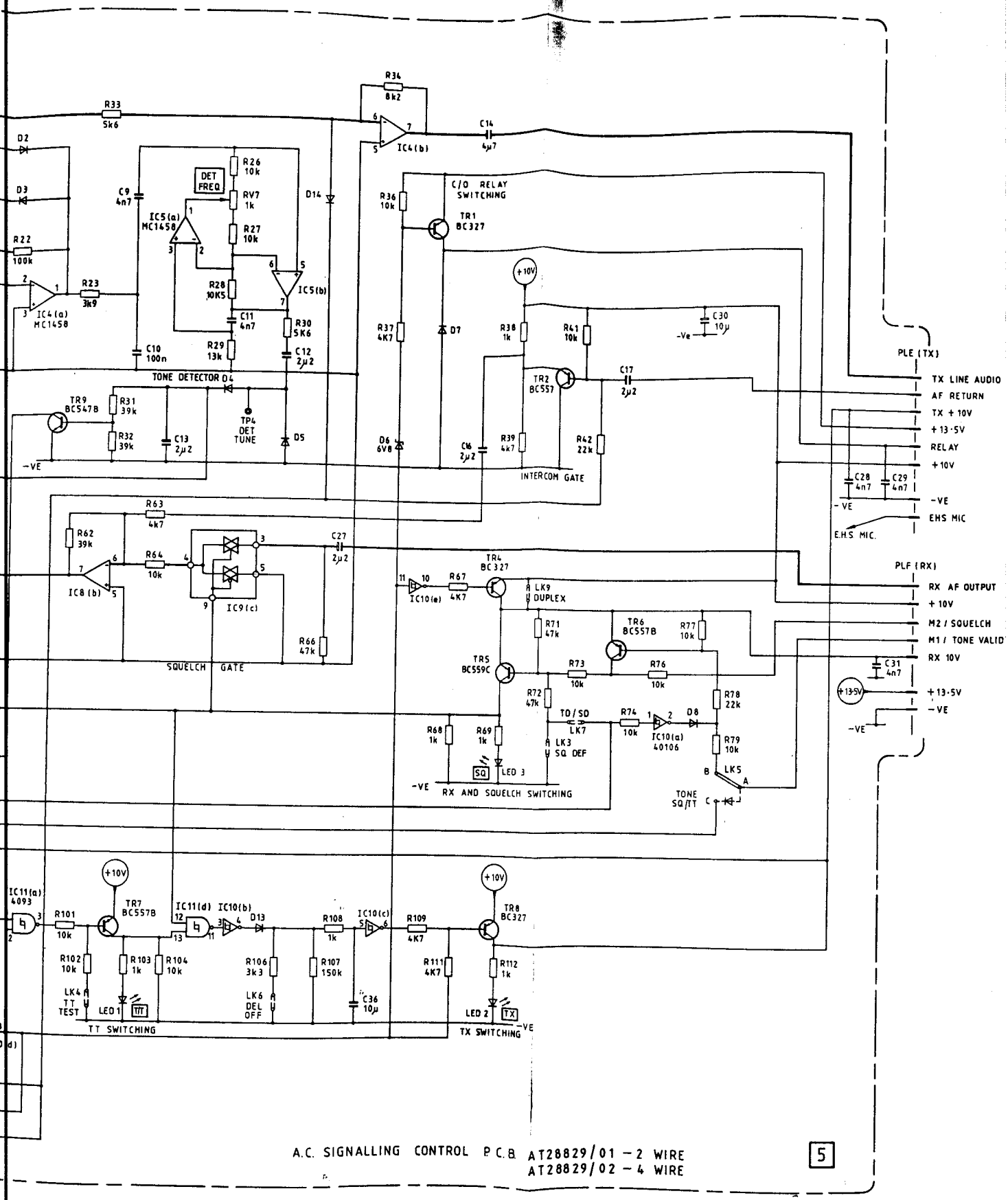

A.C. SIGNALLING CONTROL P.C.B. AT28829/01 – 2 WIRE
AT28829/02 – 4 WIRE

5

CONTROL OPTION CODE	LKS
31 — 34	A — B
35 — 38	A —▷|— C

I C SUPPLY PINS		
I C	-VE	+VE (10V)
1 – 8	4	8
9	8	16
10, 11	7	14

FIG. 5 AT28829/–
CIRCUIT & LAYOUT DIAGRAM

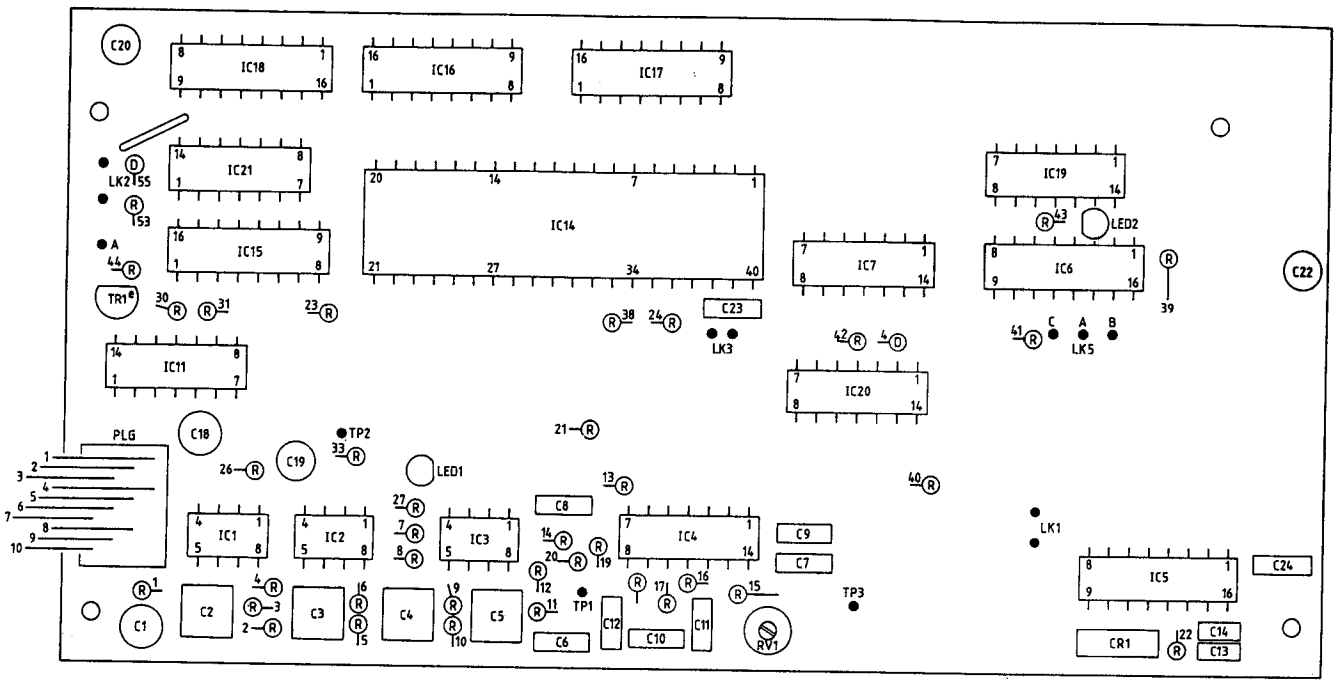

AT28830

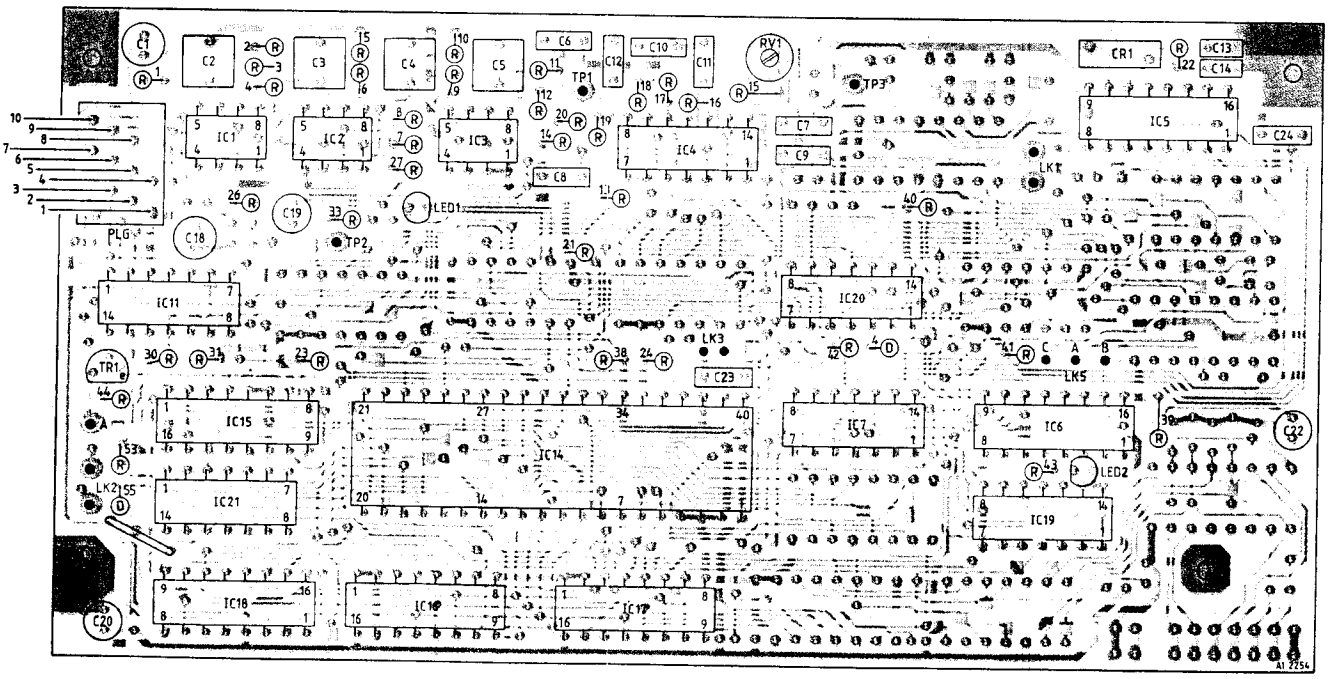

TP101/4

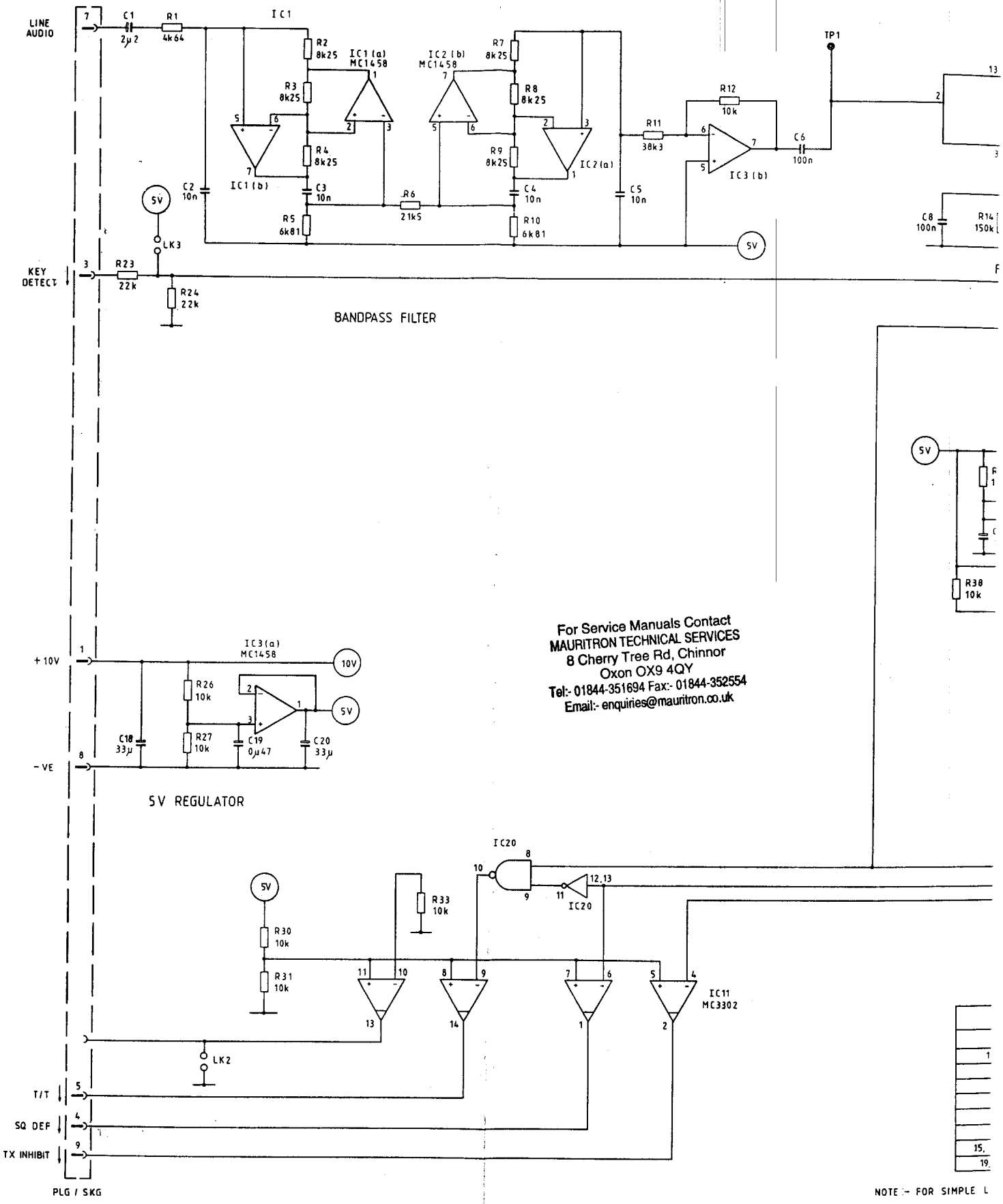

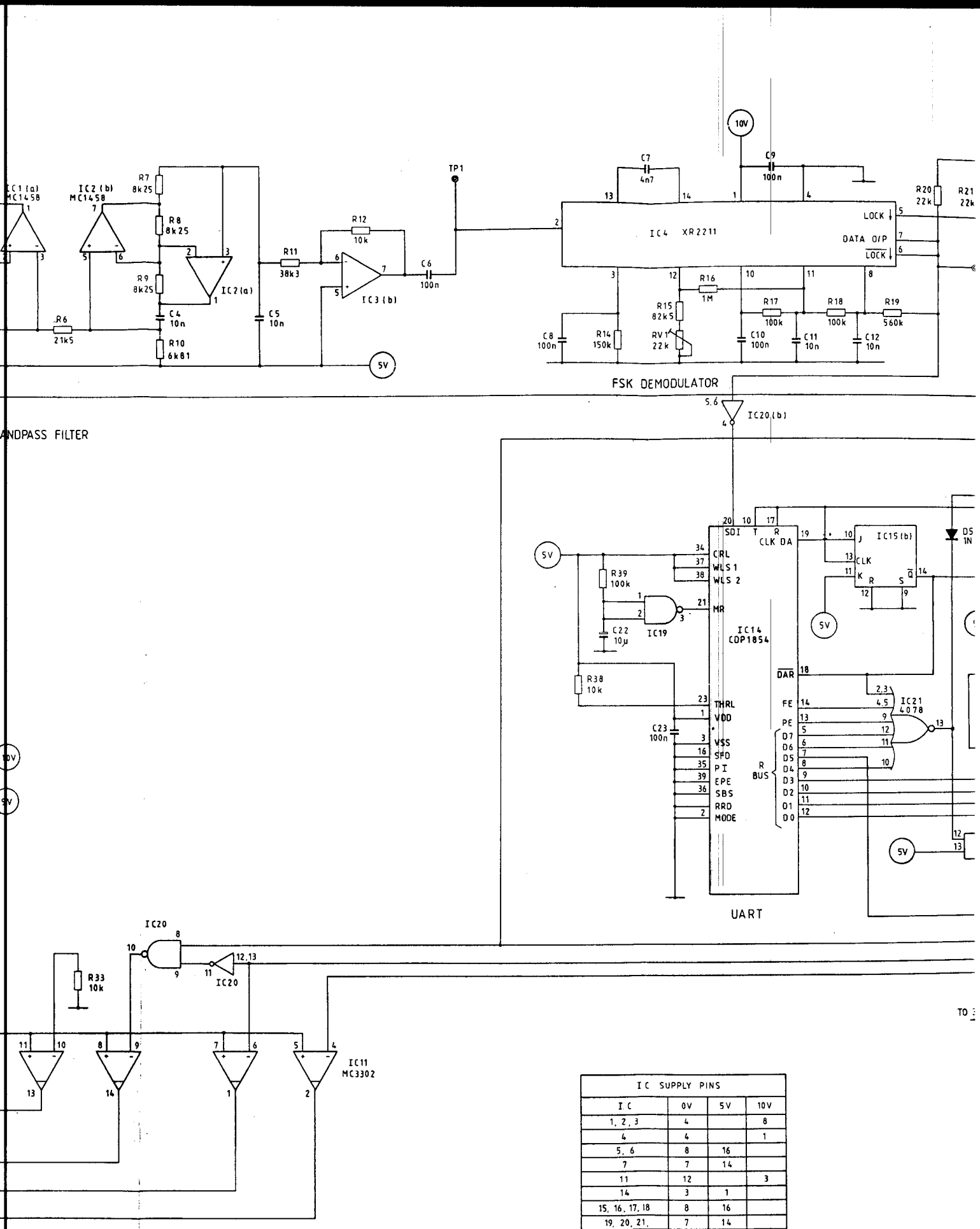

IC SUPPLY PINS			
I.C	0V	5V	10V
1, 2, 3	4		8
4	4		1
5, 6	8	16	
7	7	14	
11	12		3
14	3	1	
15, 16, 17, 18	8	16	
19, 20, 21,	7	14	

NOTE :- FOR SIMPLE LINEFAIL TALKTHROUGH LINK LK5 A - B

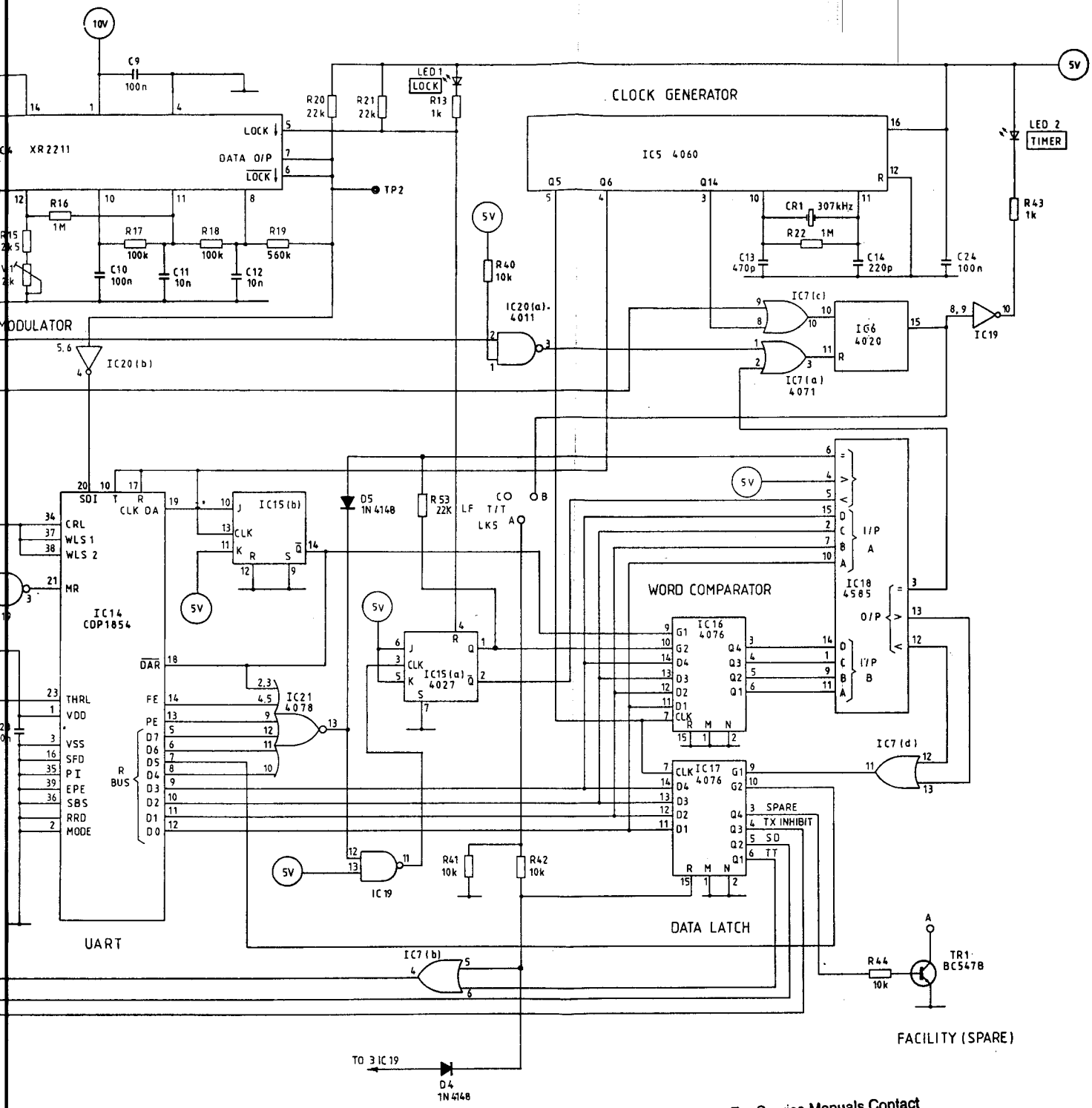

SUPPLY PINS		
0V	5V	10V
4		8
4		1
8	16	
7	14	
12		3
3	1	
8	16	
7	14	

TALKTHROUGH LINK LK5 A - B

For Service Manuals Contact
MAURITRON TECHNICAL SERVICES
8 Cherry Tree Rd, Chinnor
Oxon OX9 4QY
Tel:- 01844-351694 Fax:- 01844-352554
Email:- enquiries@mauritron.co.uk

FIG. 6 AT28830/–
CIRCUIT & LAYOUT DIAGRAM

C/N Refs.
646/133,135,137-144

June,1991

AMENDMENT No 4
to
SERVICE MANUAL TP101 & TP103,Issue 3
(F494 /F496 Equipments)

Note : Replacement Sheets
Where these are provided, cut out existing sheets, leaving approx. 15mm stub for attachment of new sheet.

PART1 - LINK / BASE STATION

SECTION 2 INSTALLATION & OPERATION

Page 2.6 Crystal Information

Under F496 Transmitter,in column (b) of table, in two places amend 'P504 DQ' to read 'P504 DQA'.
To the Note at the foot of the page add:-
The suffix 'A' denotes 'Aged' crystal.

SECTION 4 SERVICING

Page 4.9/ 4/10 Replace existing sheet with new sheet carrying amended page 4.10 (TP101/4).

SECTION 5 PARTS LIST

Page 5.17 Under 'Semiconductors & ICs'
Amend TR1 detail:- BFT 95 - FV07539 to read
BFQ 51 - FV05600.

Page 5.19 Under 'Resistors (contd.)'
Amend RV3 part number to PL62112 (was PL03627)

Page 5.21 Under 'Miscellaneous' add new last line:-
Thumbwheel, white - PL62113

Page 5.23 Amend R176 detail:- 10R PM01412 to read
68R PM01422
Add R208,209..... 3R3 5% 0,25W c.film PM01406

Page 5.27 Under 'Semiconductors' amend TR300 detail:-
UMO B30 - FV33815 to read BLU30/12 - 9337 434 00112

Under 'Capacitors' amend C302,303 detail :-
10p PN09345 to read 18p PN99762

SECTION 6 DIAGRAMS

Fig 6.8 F496 - TX Board AT28727/- Layout Diagram
Replace existing sheet with new sheet attached
(R208,209 added)

Fig 6.10 F496 - Transceiver - Circuit Diagram
Replace existing sheet with new sheet attached
(Tx.Assy : R176 value change,R208,209 added
C302,303 value change,TR300 type change)
(Rx.Assy : TR1 type change)

PART 2 - CONTROL OPTIONS

Page 26 Against RV5-7 amend P/N :- PL99687 to read PL99581

Page 29/ 30 Replace existing sheet with new attached
(p29 reflects changes to Fig 6 ; p30 shows change of RV1 part number).

Fig 6 AT28830 Circuit & Layout Diagram

Replace existing sheet with new sheet attached
(D5,R53 added;AND-gate (part IC19) added to Clk input of IC15a; new feed-point to IC7 pin 9).

Recording : The incorporation of this amendment into service manual should be recorded on the 'Amendment List' page on the reverse side of the flyleaf.

6. Tx Alignment

(a) Connect test equipment as shown in Fig. 4.8

(b) Select channel frequency closest to the centre frequency of the band covered

F494 EQUIPMENTS:–

(c) Set [3] RV5 to mid position
[3] RV6 to mid position
[3] RV7 fully clockwise

(d) Carry out the following alignment

STEP	TEST EQUIPMENT	TEST POINT	TUNE	ADJUSTMENT
A	AV0 (10V DC)	[3] TP2	[3] C119 [3] L26	Adjust for maximum Adjust for minimum
B	AV0 (10V DC)	[3] TP3	[3] L27 [3] L28	Adjust for maximum Adjust for minimum
C	AV0 (10V DC)	[3] TP4	[3] L29 [3] L30	Adjust for maximum Adjust for minimum
D	AV0 (10V DC)	[3] TP5	[3] L31 [3] L32	Adjust for maximum Adjust for minimum
E	Diode Probe	[3] C163	[3] L34,35,32	Adjust in order for maximum

Note: To prevent the diode probe reading being masked by saturation it may be necessary to turn [3] RV7 fully counter-clockwise whilst adjusting [3] L34,35,32. Turn fully clockwise on completion.

F	Set [3] C185 fully counter-clockwise			
G	Power Supply (current meter)	—	[3] C158,163	Adjust together for maximum supply current
H	RF Power Meter	—	[3] C158,163 [3] C172,177 [3] C183,185	Adjust in pairs for maximum power output

Note: On E band C158, 172, 183 may reach extreme settings near band edge.

K	RF Power Meter	—	[3] RV7	Increase slowly to maximum; check no instability is present
L	Set [3] RV6 for the required output power.			
M	Frequency Counter			Check each channel frequency is within 10Hz.
N	Modulation Meter	—	[3] RV6	With AF input level of 20mV at 1kHz adjust for peak system deviation

Note: Peak system deviation varies with channel spacing:

Channel spacing (S) 12,5 kHz - Peak Deviation 2,5 kHz
Channel spacing (R) 20 kHz - Peak Deviation 4 kHz
Channel Spacing (V) 25 kHz - Peak Deviation 5 kHz

P	Modulation Meter	[3] RV5	Reduce AF input level to 2mV; adjust for 60% peak deviation

Disconnect all test equipment

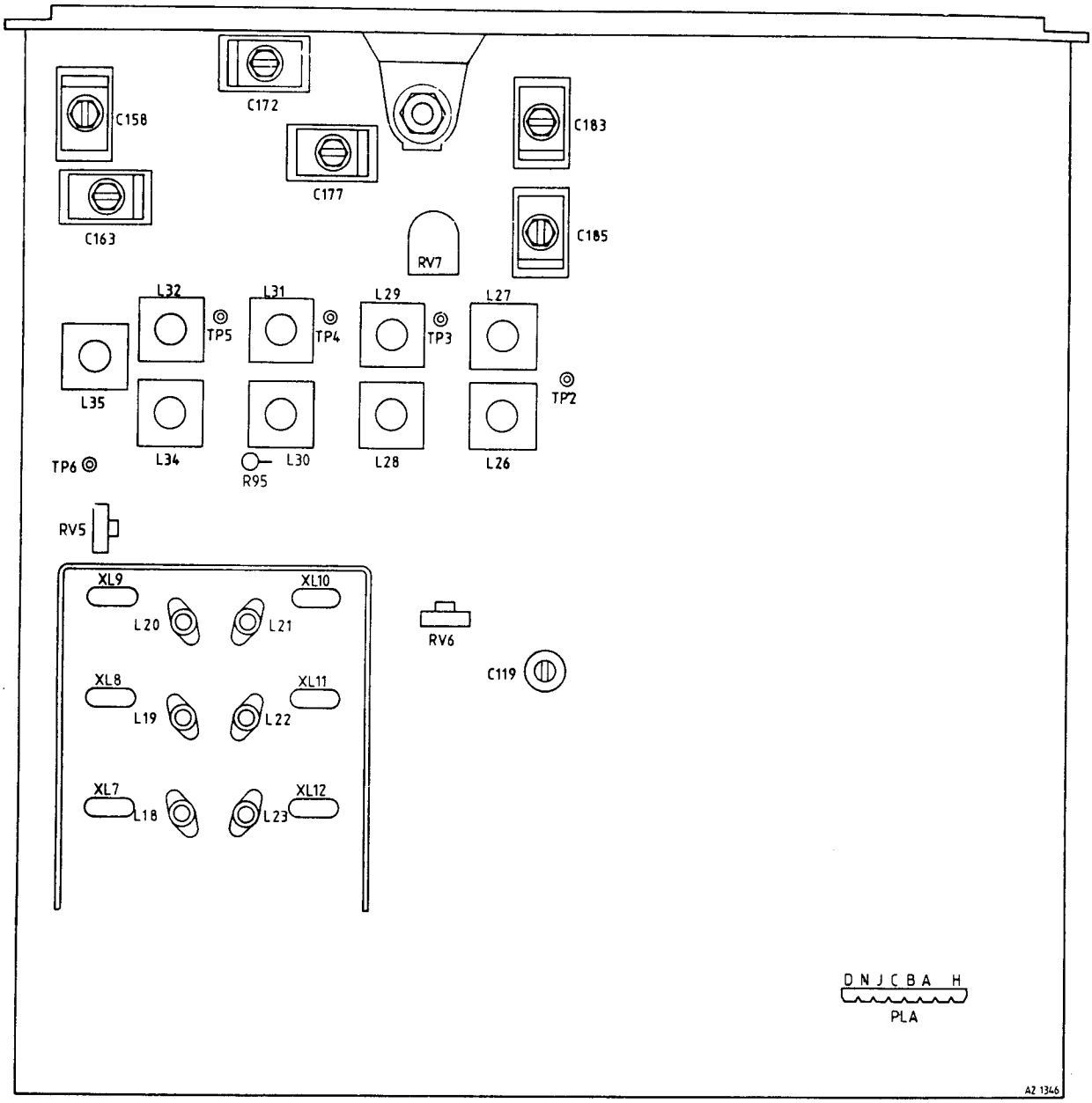

Fig 4.6 F494 Transmitter Alignment Diagram

For Service Manuals Contact
MAURITRON TECHNICAL SERVICES
8 Cherry Tree Rd, Chinnor
Oxon OX9 4QY
Tel:- 01844-351694 Fax:- 01844-352554
Email:- enquiries@mauritron.co.uk

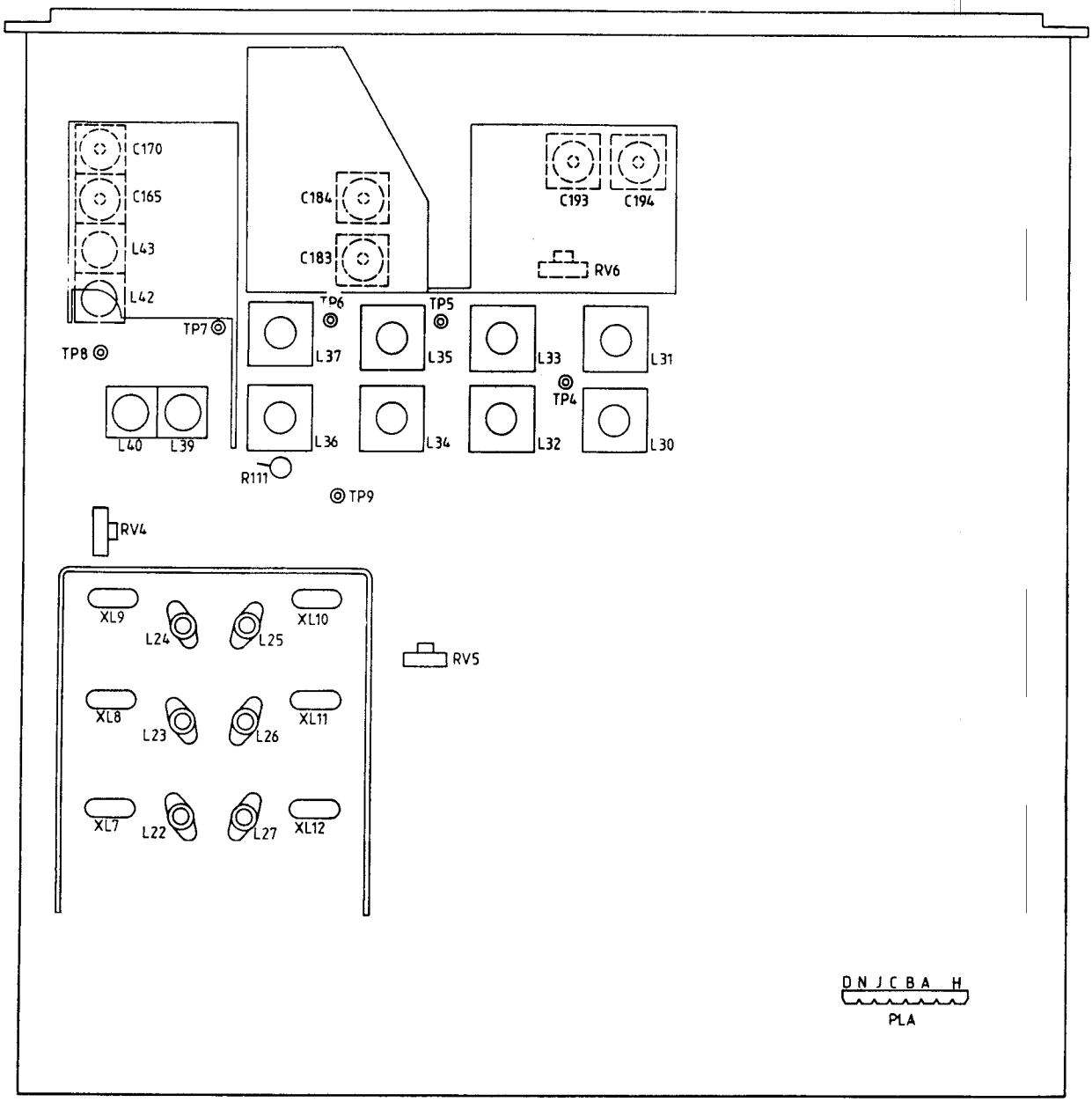

Fig 4.7 F496 Transmitter Alignment Diagram

F496 EQUIPMENTS:–

(c) Set cores of coils [3] L30-37 flush with the top of their formers
Set [3] C183, [3] C193 to half mesh
Set [3] C194 to minimum mesh
Set [3] C184 to three-quarters mesh; C165,C170 to quarter mesh. See Note 1.

(d) Set [3] RV4 to mid position
Set [3] RV5 to mid position
Set [3] RV6 fully counter-clockwise

(e) Carry out the following alignment:

STEP	TEST EQUIPMENT	TEST POINT	TUNE	ADJUSTMENT
A	AV0 (10V DC)	[3] TP4	[3] L30,31	Adjust for maximum
B	AV0 (2,5V DC)	[3] TP5	[3] L32,33 [3] L34	Adjust for maximum Adjust for minimum
C	AV0 (2,5V DC)	[3] TP6	[3] L35 [3] L36	Adjust for maximum Adjust for minimum
D	AV0 (2,5V DC)	[3]TP7	[3] L37 [3] L39	Adjust for maximum Adjust for minimum
E	AV0 (10V DC)	[3] TP8	[3] L39,40 [3] L42	Adjust for maximum Adjust for minimum

Note: For steps F to M inclusive the equipment MUST be supplied from the DC PSU.

F	DC PSU Ammeter		[3] L43 [3] C165	Adjust for maximum DC supply current } See Note 2
G	DC PSU Ammeter then RF Power Meter		[3] C165, C170 [3] C183 [3] C193, 194	Initially adjust for maximum DC supply current. When power meter registers output power tune for maximum output power
H (25W Units only)	RF Power Meter		[4] C306 [3] C193 [3] C194 [4] C306 [3] C183,193 [3] C194 [4] C306	Tune for maximum power output SET AT FULL MESH Tune for maximum power output Tune for maximum power output Tune for maximum power output Tune for maximum power output
J	RF Power meter		[3] L37 [3] L39,40 [3] L42,43 [3] C165	De-tune to give less than 5W (20W for 25W equipments) output. Tune for maximum power output further de-tuning [3] L37 if necessary to keep power below 5W (20W for 25W equipments)
	AV0 (2,5V DC)	[3] TP7	[3] L37	Adjust for maximum - See Note 3
	RF Power Meter		[3] RV6	Vary from fully counter clockwise to fully clockwise, check no instability is present throughout range
K	Set [3] RV6 for the required output power			
L	Frequency Counter			Check each channel frequency is within 10Hz
M	Modulation Meter		[3] RV5	With AF input level of 20mV at 1 kHz adjust for peak system deviation

Notes. 1. For minimum stress and maximum reliability, these settings MUST be used when tuning previously unaligned equipment.

2. As soon as RF power is indicated on meter adjust to that.

3. Check RF power; if greater than 30W adjust RV1 (SET VOLTS) on Regulator board to reduce output at pin 8 of board from 15V to not less than 13,5V DC.

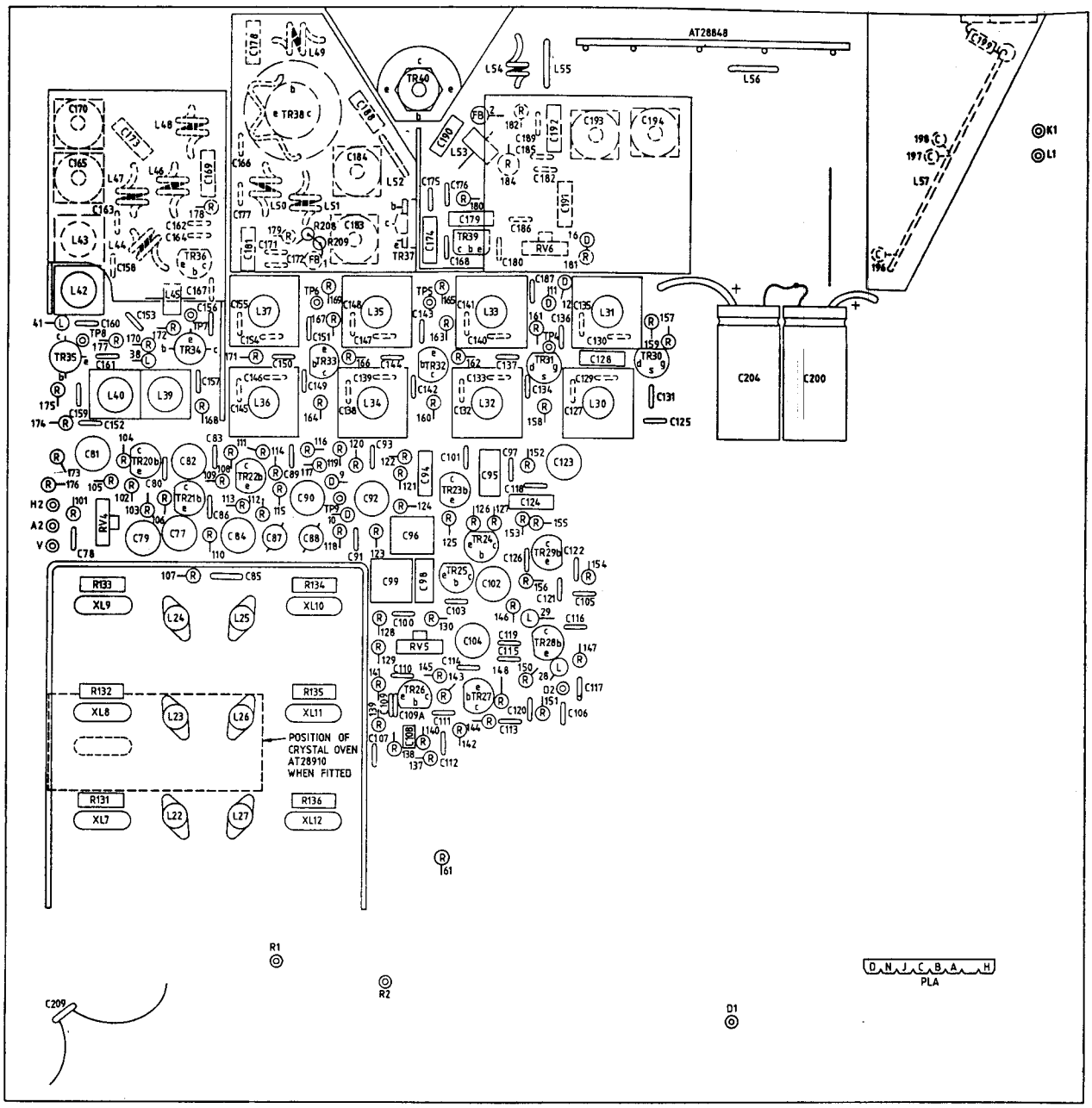

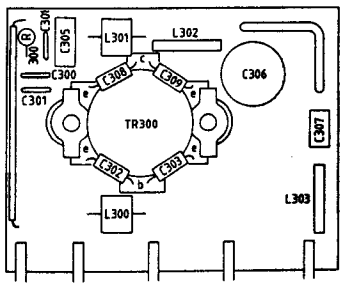

TP101/4

FIG. 6.8 F496 – TX BOARD AT28727/– LAYOUT DIAGRAM

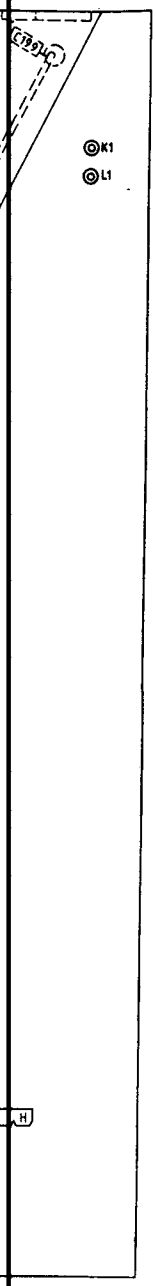

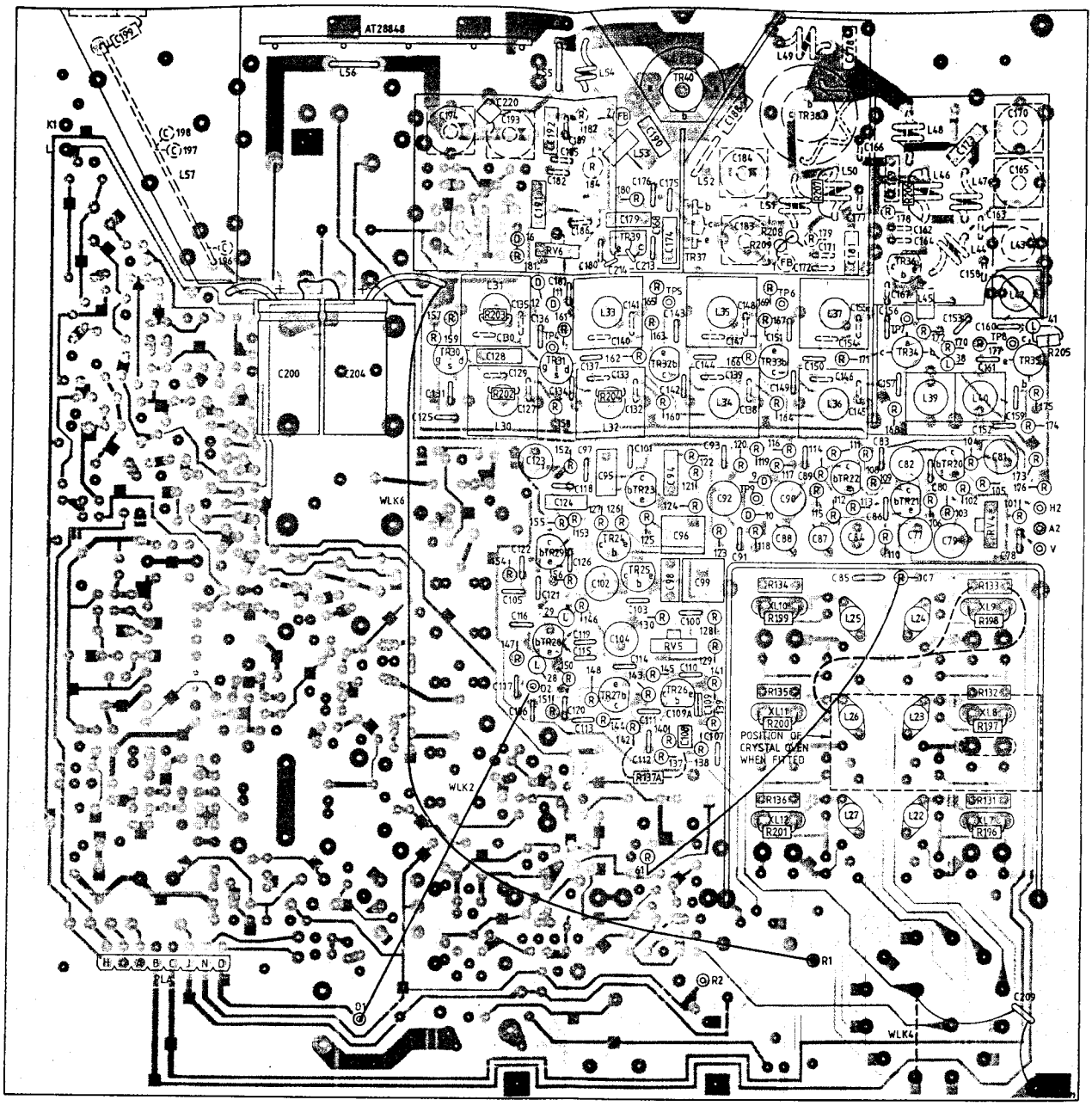

TRANSMITTER

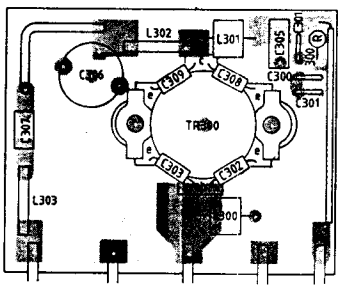

AT28848

For Service Manuals Contact
MAURITRON TECHNICAL SERVICES
8 Cherry Tree Rd, Chinnor
Oxon OX9 4QY
Tel:- 01844-351694 Fax:- 01844-352554
Email:- enquiries@mauritron.co.uk

The UART also carries out checks for 'framing error' (word of wrong length) and 'parity error' (number of high bits in word content does not match with parity check bit) on each incoming word, producing a 'high' (error indication) at pin 14 or 13 as appropriate. These outputs, gated with DAR and bits d_4 d_6 and d_7, are used in word-validation checks (see below).

Word Validation & Data Comparison

A correct FSK burst consists of two identical data words.

On arrival of the first word, data bits d_0-d_3 are latched into IC16 and stored as I/P B to comparator IC18. If the word is valid all inputs to IC21 are 'low'; the resulting 'high' on pin 13, inverted in IC19, clocks IC15a, taking pin 1 'high'; this inhibits IC16 from latching in the second word and, via R53, primes the comparator.

On arrival of the second word, bits d0-3_3 at I/P A to IC18 are compared with those of the first word stored at I/P B. If these are identical and the word-validity check correct, pins 12 and 13 of IC18 will go 'low'. If d_5 is also 'low' then pins 9 and 10 of output latch IC17 will be 'low' and the data stored at outputs Q_{1-4}.

Logic Outputs

The outputs on IC17 pins 3-6 are fed to the control module via open collector output level converters (IC11) and pins of PLG. Gating in IC20 inhibits 'Talkthrough' when 'Squelch Defeat' is selected.

Clock Generator

Clock generator IC5 employs a 307 kHz ceramic resonator and provides an output to the line-fail counter IC6 and clock inputs to IC14-17.

Line Fail Counter

If not inhibited by T/T ('high' to IC7 pin 9 from IC7 pin 4), counter IC6 is clocked from the Q_{14} output of IC5 ; it is reset whenever a valid data word is received or, unless LK3 is linked, when keytone is detected. If neither occurs in a period of 54 seconds, the counter stops, pin 15 goes 'high' and LED 2 is lit. If LK5 is linked A-B, the Base Station is switched to T/T and the output data latch IC17 is reset.

PARTS LIST

AC SIGNALLING FACILITY PCB [6]

AT28830/01

Cct. Ref	Description	Part No	Remarks
SEMICONDUCTORS & ICS			
IC1–3	IC Dual Op Amp	FU99092	
IC4	IC FSK Demod/Tone Decoder	FU03751	
IC5	IC 4060 MOS	FU99121	
IC6	IC 4020 MOS	FU99067	
IC7	IC 4071 MOS	FU99093	
IC8–10			Not Used
IC11	IC Quad Comparator	FU99120	
IC12,13			Not Used
IC14	IC UART	FU09159	
IC15	IC 4027 MOS	FU99071	
IC16,17	IC 4076 MOS	FU99140	
IC18	IC COS/MOS Mag Comparator	FU09166	
IC19	IC 4093 MOS	FU99103	
IC20	IC 4011 MOS	FU99062	
IC21	IC 4078 MOS	FU99130	
TR1	Transistor BC547B	FV05891	
D1–3			Not Used
D4	Diode 1N4148	FV05808	
D5	Diode GP1N4148	FV05808	

RESISTORS

R1	4k64	±1%	0,25W	m.film	PL99094	
R2–4	8k25	±1%	0,25W	m.film	PL99097	
R5	6k81	±1%	0,25W	m.film	PL99096	
R6	21k5	±1%	0,25W	m.film	PL99102	
R7–9	8k25	±1%	0,25W	m.film	PL99097	
R10	6k81	±1%	0,25W	m.film	PL99096	
R11	38k3	±1%	0,25W	m.film	PL99105	
R12	10k	±5%	0,25W	c.film	PM01448	
R13	1k	±5%	0,25W	c.film	PM01436	
R14	150k	±5%	0,25W	c.film	PM01462	
R15	82k5	±1%	0,25W	m.film	PL99109	
R16	1M	±5%	0,25W	c.film	PM01472	
R17,18	100k	±5%	0,25W	c.film	PM01460	
R19	560k	±5%	0,25W	c.film	PM01469	
R20,21	22k	±5%	0,25W	c.film	PM01452	
R22	1M	±5%	0,25W	c.film	PM01472	
R23,24	22k	±5%	0,25W	c.film	PM01452	
R25						Not Used
R26,27	10k	±5%	0,25W	c.film	PM01448	
R28,29						Not Used
R30,31	10k	±5%	0,25W	c.film	PM01448	
R32						Not Used
R33	10k	±5%	0,25W	c.film	PM01448	
R34–37						Not Used
R38	10k	±5%	0,25W	c.film	PM01448	
R39	100k	±5%	0,25W	c.film	PM01460	
R40–42	10k	±5%	0,25W	c.film	PM01448	
R43	1k	±5%	0,25W	c.film	PM01436	
R44	10k	±5%	0,25W	c.film	PM01448	
R53	22k	±5%	0,25W	c.film	PM01452	
RV1	**20K**	±20%	Lin, Pot,	encl	**PL99583**	

CAPACITORS

C1	2μ2	±20%	100v	elec	PS99456
C2–5	10n	±2,5%	63V	poly	PQ99621
C6	100n	±10%	63V	poly	PQ99511
C7	4n7	±5%	25V	cer plate	PN99731
C8–10	100n	±10%	63V	poly	PQ99511
C11,12	10n	±10%	63V	poly	PQ99510

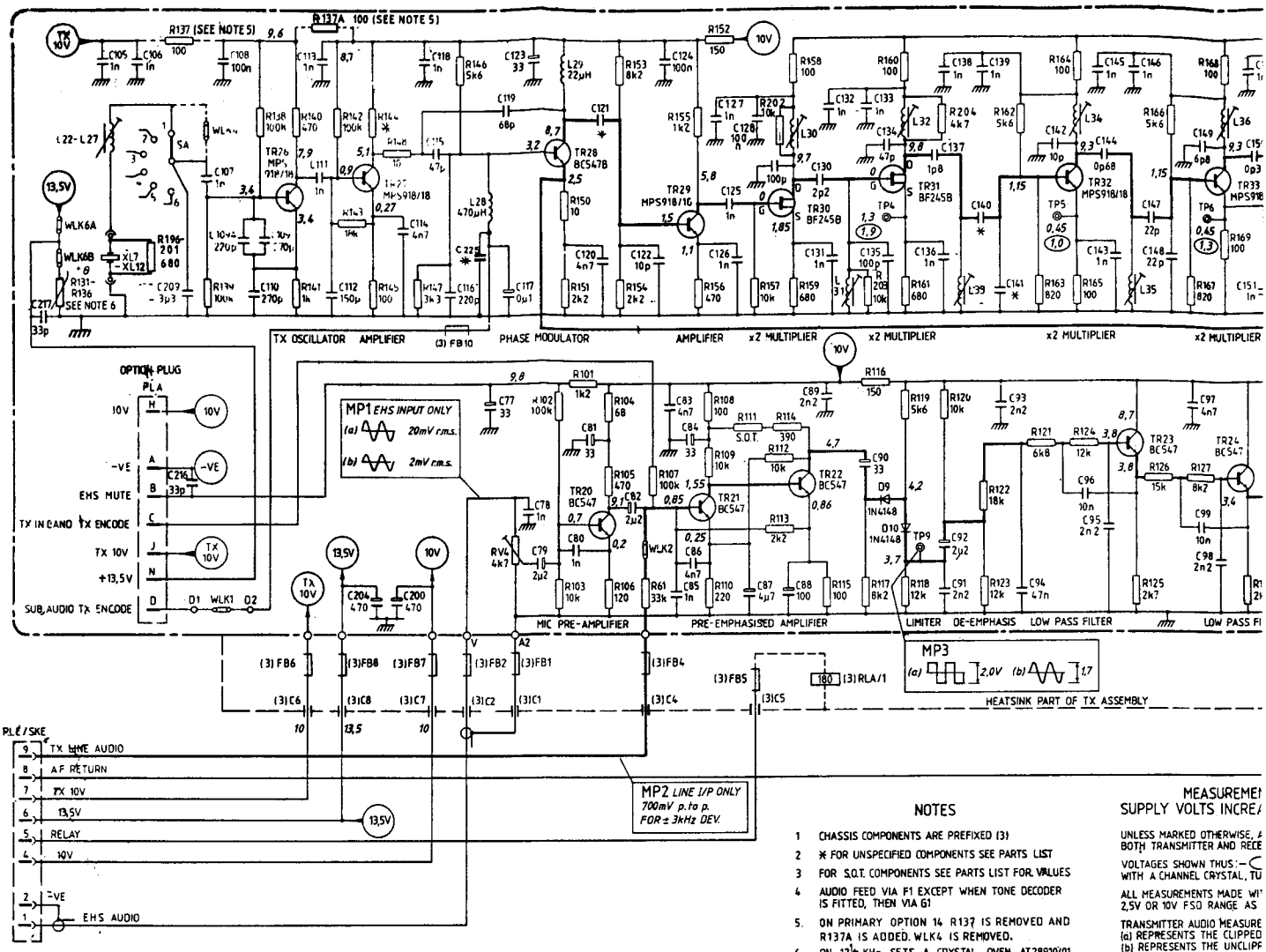

NOTES

1. CHASSIS COMPONENTS ARE PREFIXED (3)
2. * FOR UNSPECIFIED COMPONENTS SEE PARTS LIST
3. FOR S.O.T. COMPONENTS SEE PARTS LIST FOR VALUES
4. AUDIO FEED VIA F1 EXCEPT WHEN TONE DECODER IS FITTED, THEN VIA G1
5. ON PRIMARY OPTION 14 R137 IS REMOVED AND R137A IS ADDED. WLK4 IS REMOVED.
6. ON 12½ KHz SETS A CRYSTAL, OVEN AT28910/01 IS FITTED INSTEAD OF THE POSISTOR. SEE SHT2A FOR CIRCUIT.

MEASUREMEN
SUPPLY VOLTS INCREA

UNLESS MARKED OTHERWISE, A
BOTH TRANSMITTER AND RECE

VOLTAGES SHOWN THUS:— C
WITH A CHANNEL CRYSTAL, TU

ALL MEASUREMENTS MADE WI
2,5V OR 10V FSD RANGE AS

TRANSMITTER AUDIO MEASURE
(a) REPRESENTS THE CLIPPED
(b) REPRESENTS THE UNCLIPP

RECEIVER AUDIO MEASUREMEN
AT THE ANT SKT (3kHz DE

TRANSMITTER AND RECEIVER AL

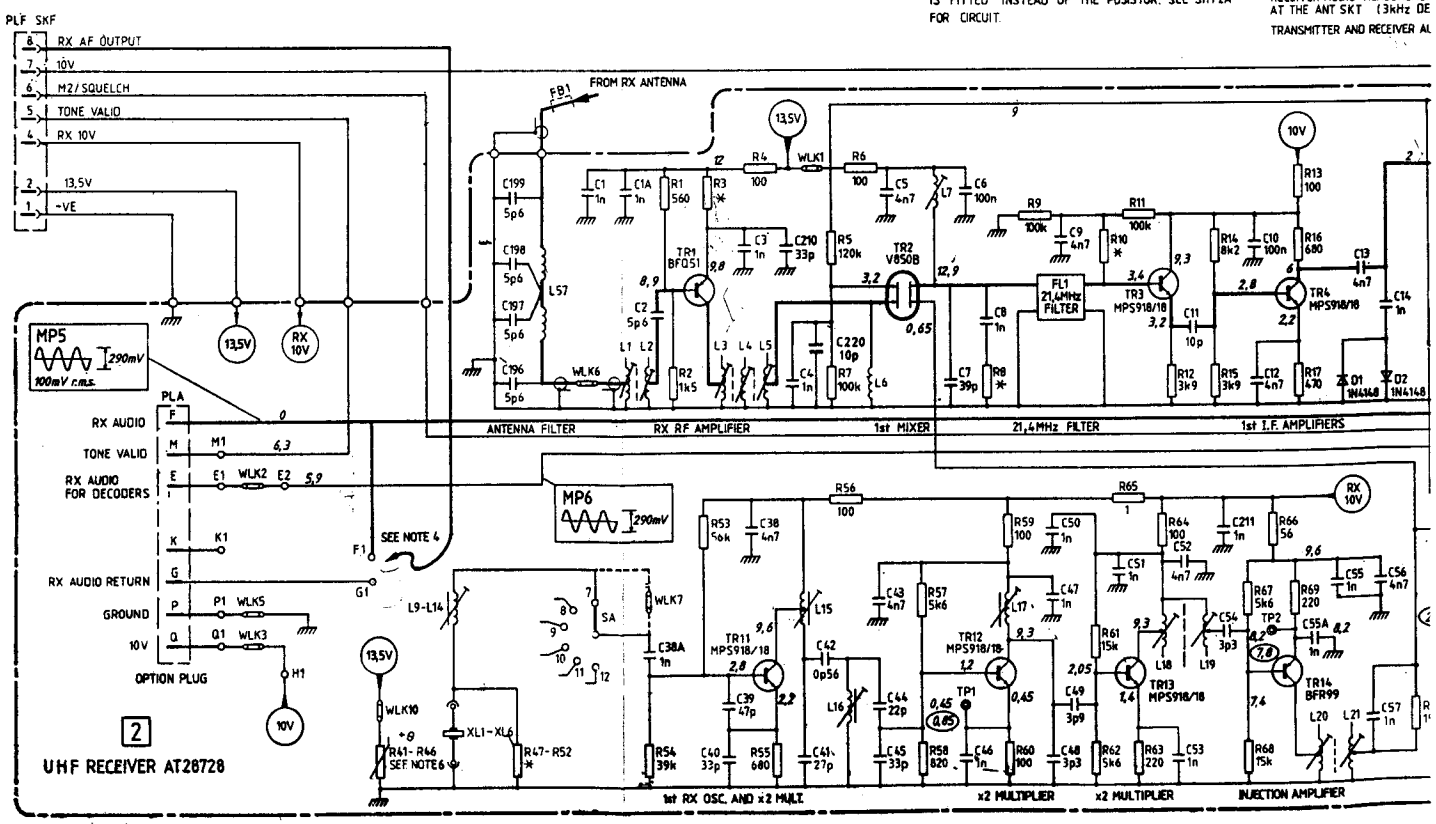

2

UHF RECEIVER AT28728

BS-RW Z CONTROL PCB THERMAL SHUTDOWN

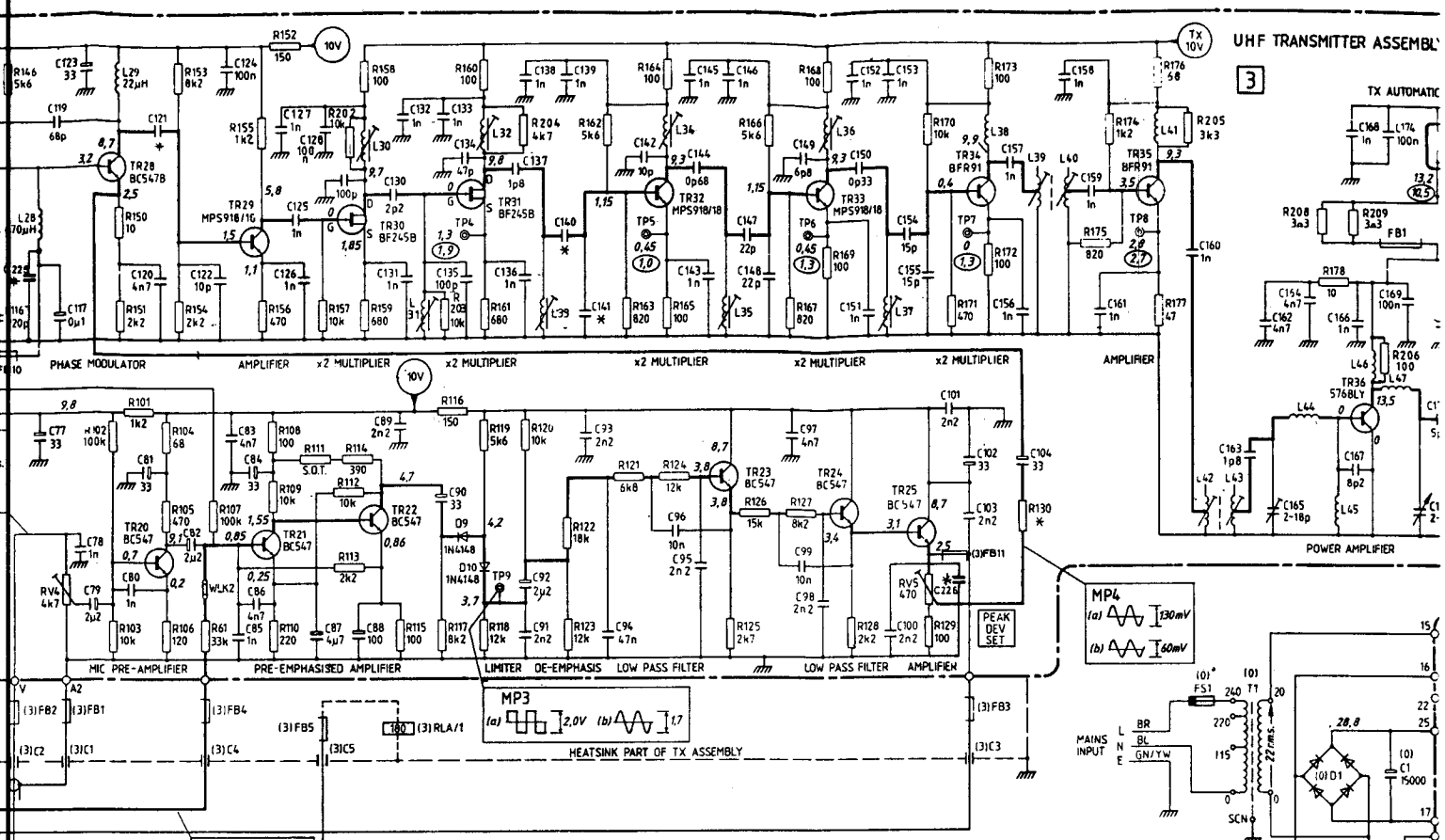

NOTES

1. CHASSIS COMPONENTS ARE PREFIXED (3)
2. * FOR UNSPECIFIED COMPONENTS SEE PARTS LIST
3. FOR S.O.T. COMPONENTS SEE PARTS LIST FOR VALUES
4. AUDIO FEED VIA F1 EXCEPT WHEN TONE DECODER IS FITTED, THEN VIA G1
5. ON PRIMARY OPTION 14 R137 IS REMOVED AND R137A IS ADDED. WLK4 IS REMOVED.
6. ON 12½ KHz SETS A CRYSTAL, OVEN AT28910/01 IS FITTED INSTEAD OF THE POSISTOR. SEE SHT2A FOR CIRCUIT.

MEASUREMENTS FOR 6W EQUIPMENT (25KHz)
SUPPLY VOLTS INCREASED TO 15V FOR 25W EQUIPMENT

UNLESS MARKED OTHERWISE, ALL VOLTAGES SHOWN ARE MEASURED WITH BOTH TRANSMITTER AND RECEIVER ENERGISED, BUT UNCRYSTALLED

VOLTAGES SHOWN THUS:—◯ REPRESENT TYPICAL VALUES WHEN FITTED WITH A CHANNEL CRYSTAL, TUNED ACCORDING TO THE HANDBOOK

ALL MEASUREMENTS MADE WITH A 20kΩ/VOLT METER ON EITHER THE 2.5V OR 10V FSD RANGE AS APPROPRIATE

TRANSMITTER AUDIO MEASUREMENTS ARE SHOWN AT TWO LEVELS.
(a) REPRESENTS THE CLIPPED LEVEL SET FOR ± 5kHz DEVIATION
(b) REPRESENTS THE UNCLIPPED LEVEL SET FOR ± 3kHz DEVIATION

RECEIVER AUDIO MEASUREMENTS ARE SHOWN FOR 1mV RF SIGNAL LEVEL AT THE ANT SKT (3kHz DEVIATION)

TRANSMITTER AND RECEIVER AUDIO MEASUREMENTS AT 1kHz

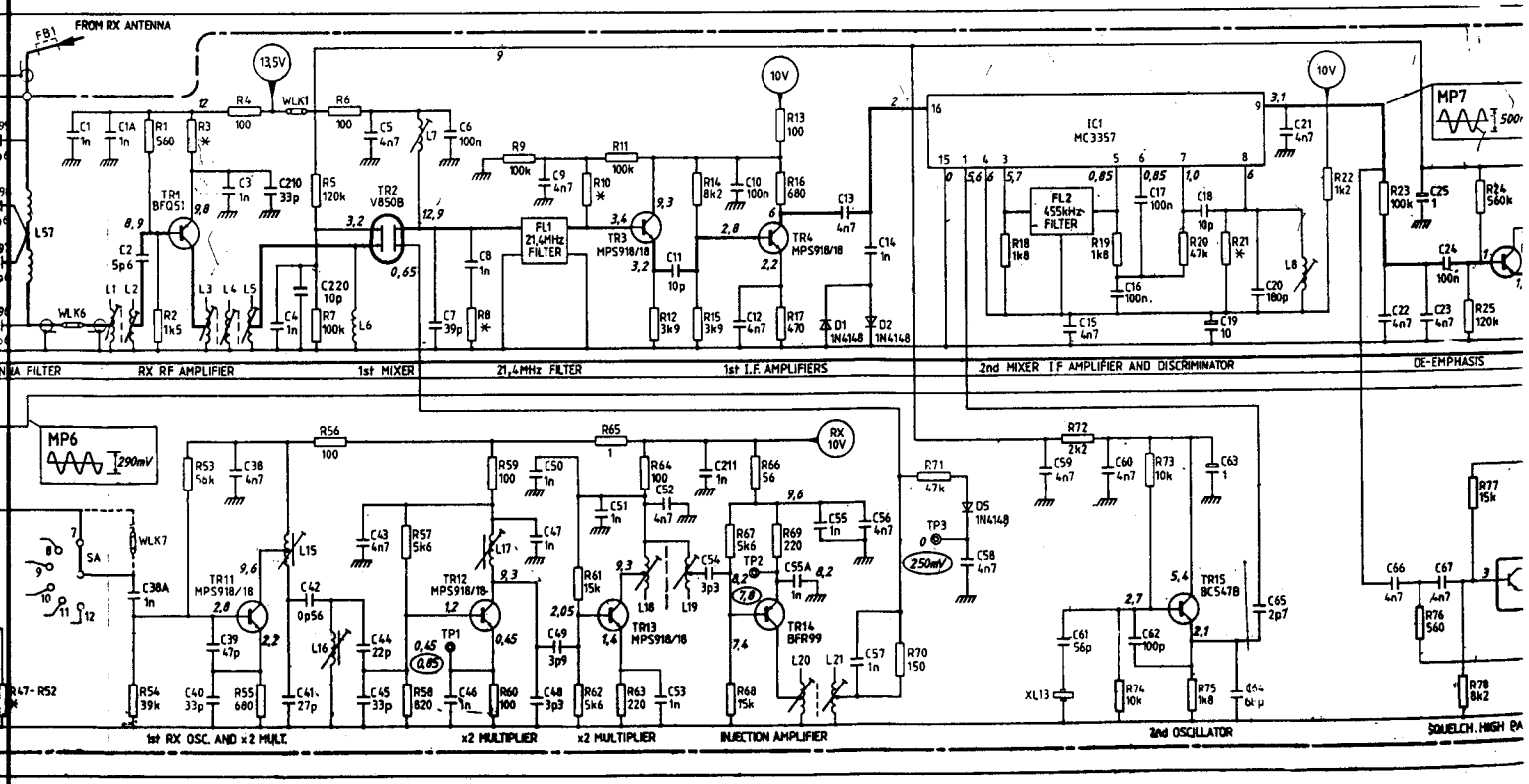

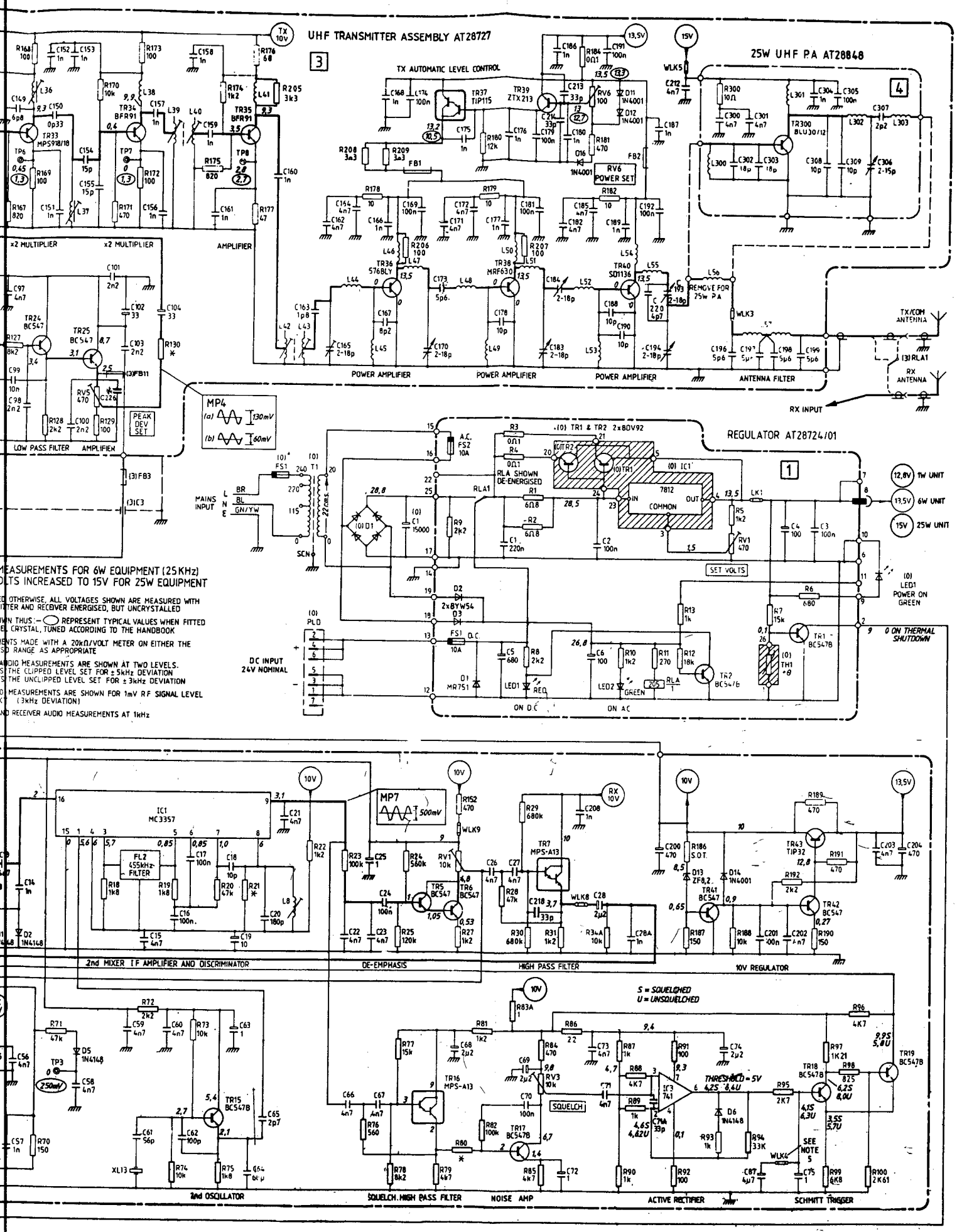

FIG. 6.10 F496 – TRANSCEIVER CIRCUIT DIAGRAM

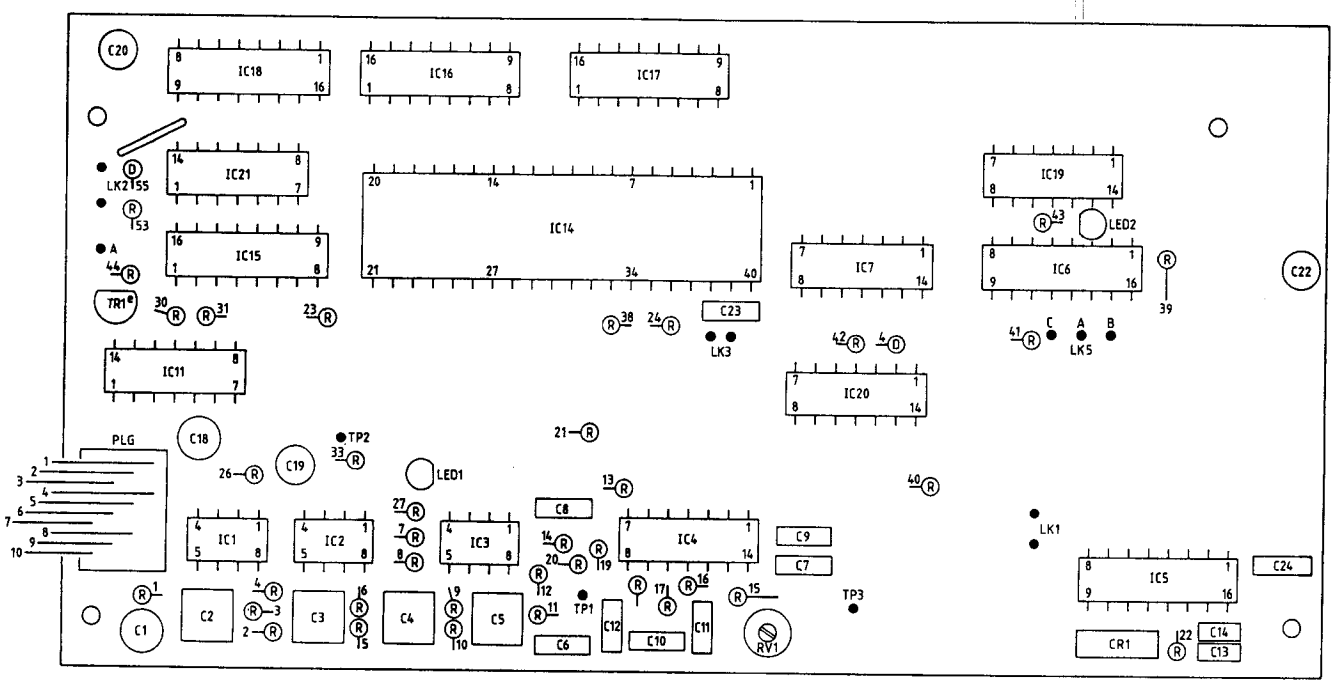

AT28830

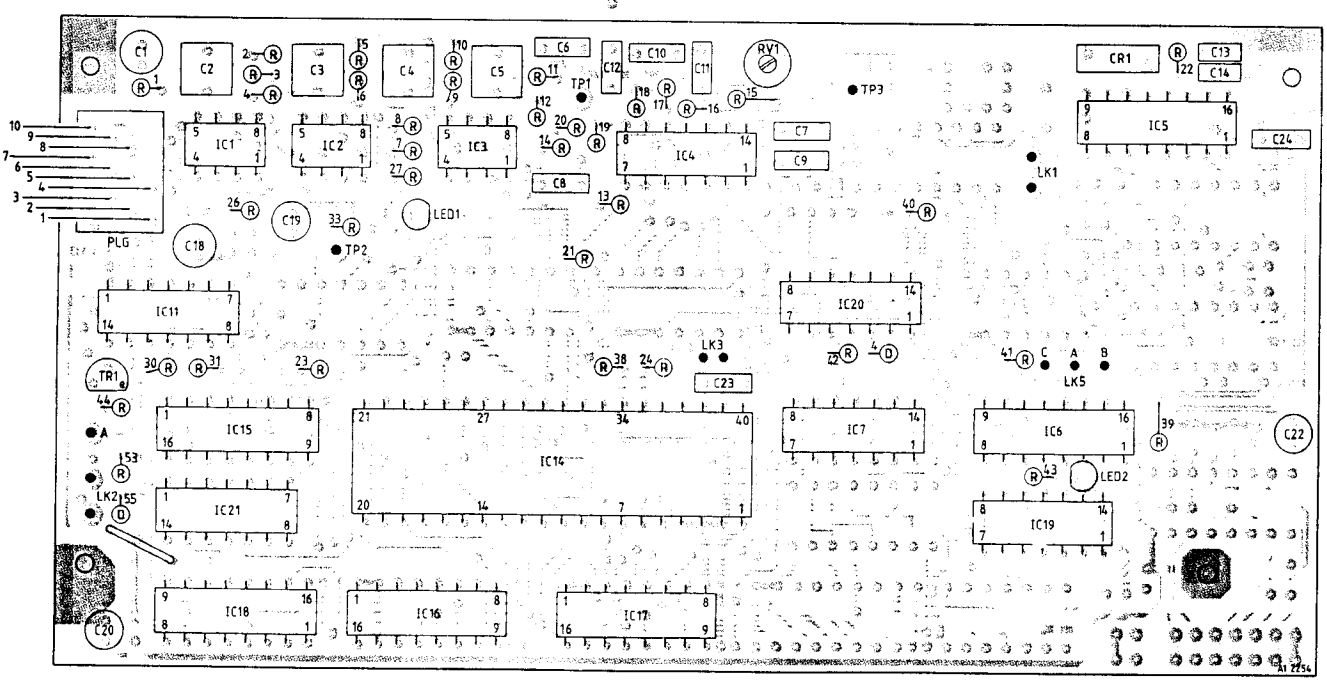

TP101/4

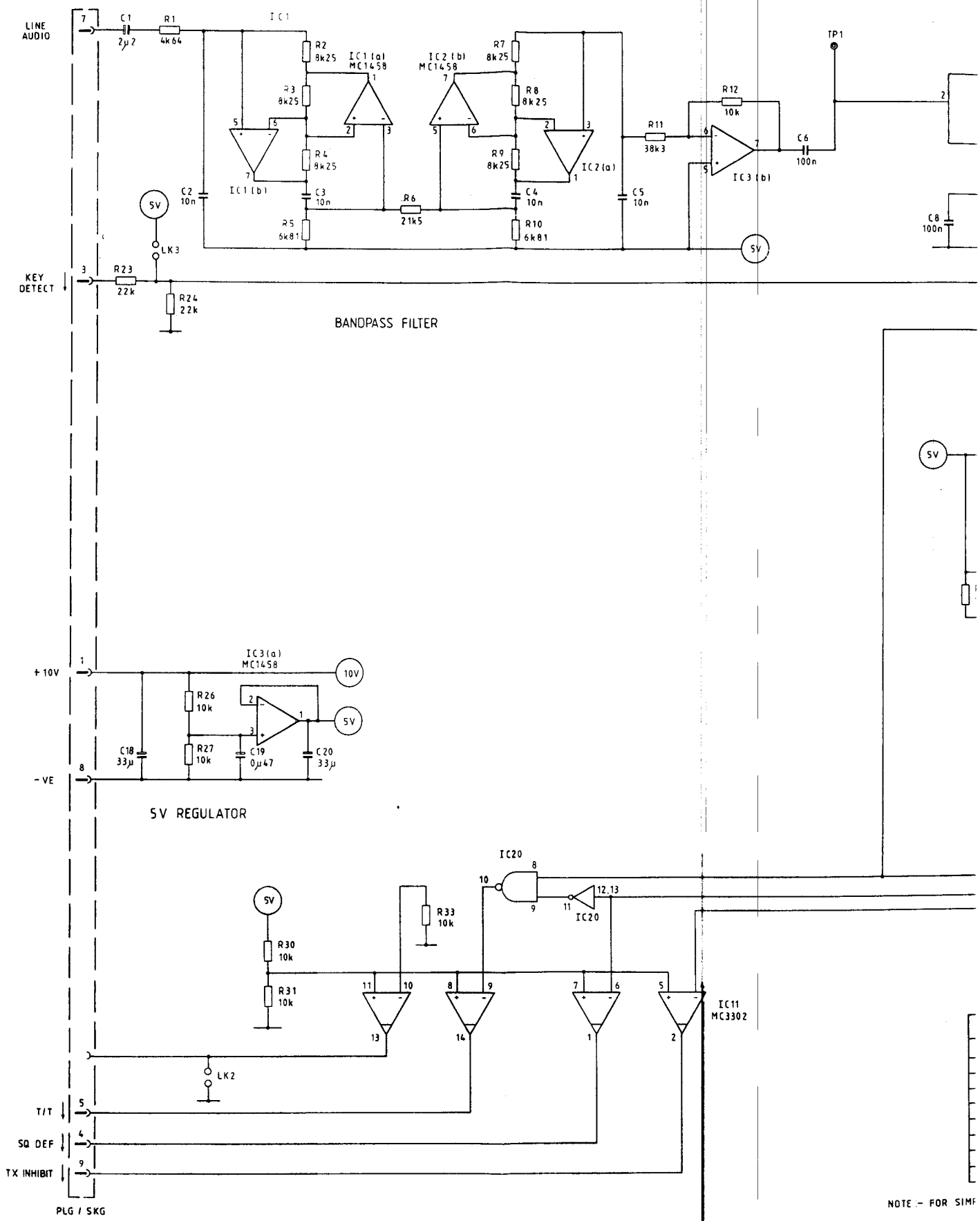
LINE AUDIO
C1 2µ2
R1 4k64
IC1
R2 8k25
IC1(a) MC1458
R3 8k25
R4 8k25
IC1(b)
C2 10n
C3 10n
R5 6k81
R6 21k5
IC2(b) MC1458
R7 8k25
R8 8k25
R9 8k25
IC2(a)
C4 10n
R10 6k81
C5 10n
R11 38k3
R12 10k
IC3(b)
C6 100n
TP1
C8 100n
5V
LK3
KEY DETECT
R23 22k
R24 22k
BANDPASS FILTER
+10V
IC3(a) MC1458
10V
R26 10k
R27 10k
C18 33µ
C19 0µ47
C20 33µ
-VE
5V REGULATOR
IC20
R33 10k
R30 10k
R31 10k
IC11 MC3302
LK2
T/T
SQ DEF
TX INHIBIT
PLG / SKG
NOTE :- FOR SIMF

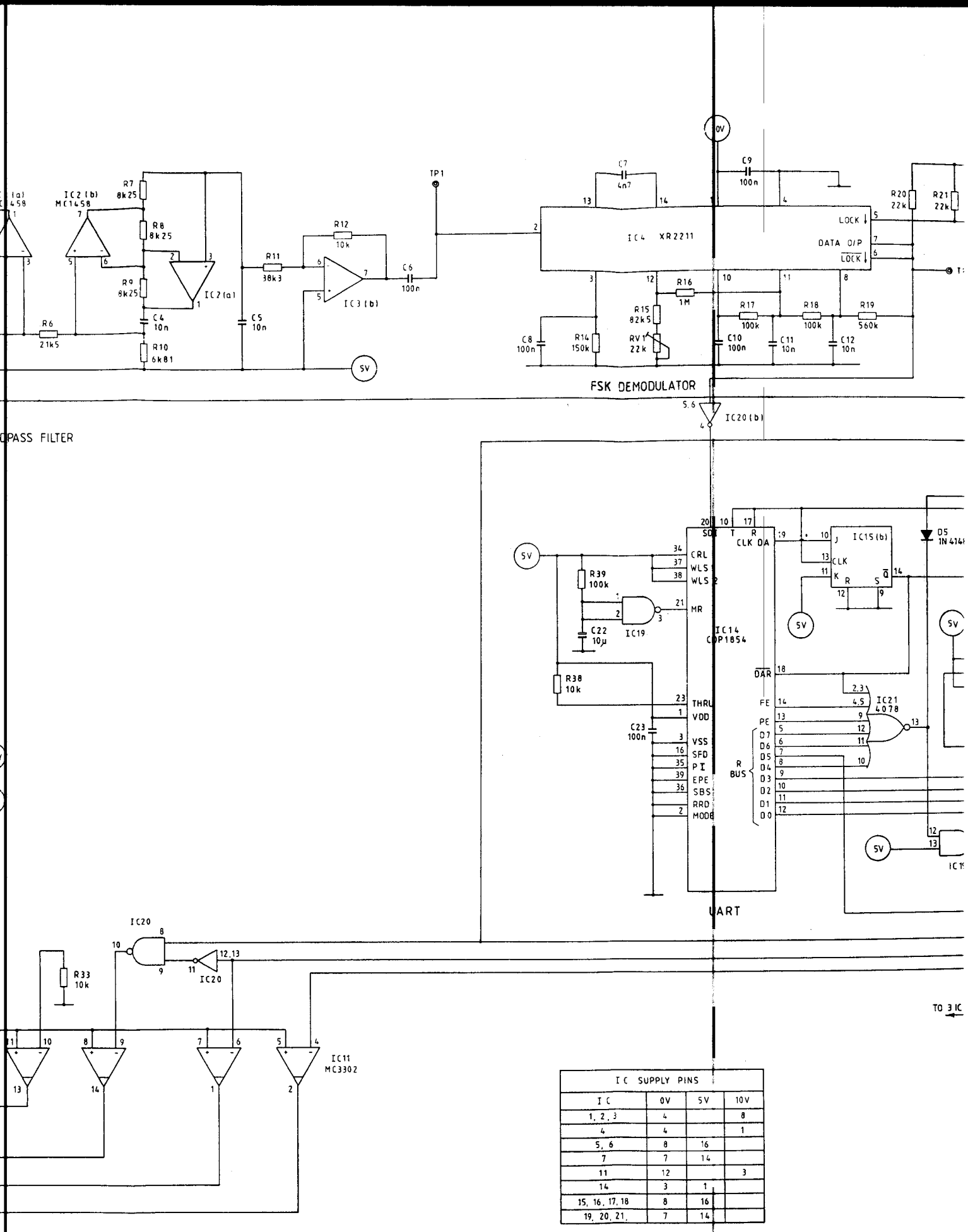

IC SUPPLY PINS			
IC	0V	5V	10V
1, 2, 3	4		8
4	4		1
5, 6	8	16	
7	7	14	
11	12		3
14	3	1	
15, 16, 17, 18	8	16	
19, 20, 21,	7	14	

NOTE :- FOR SIMPLE LINEFAIL TALKTHROUGH LINK LKS A - B

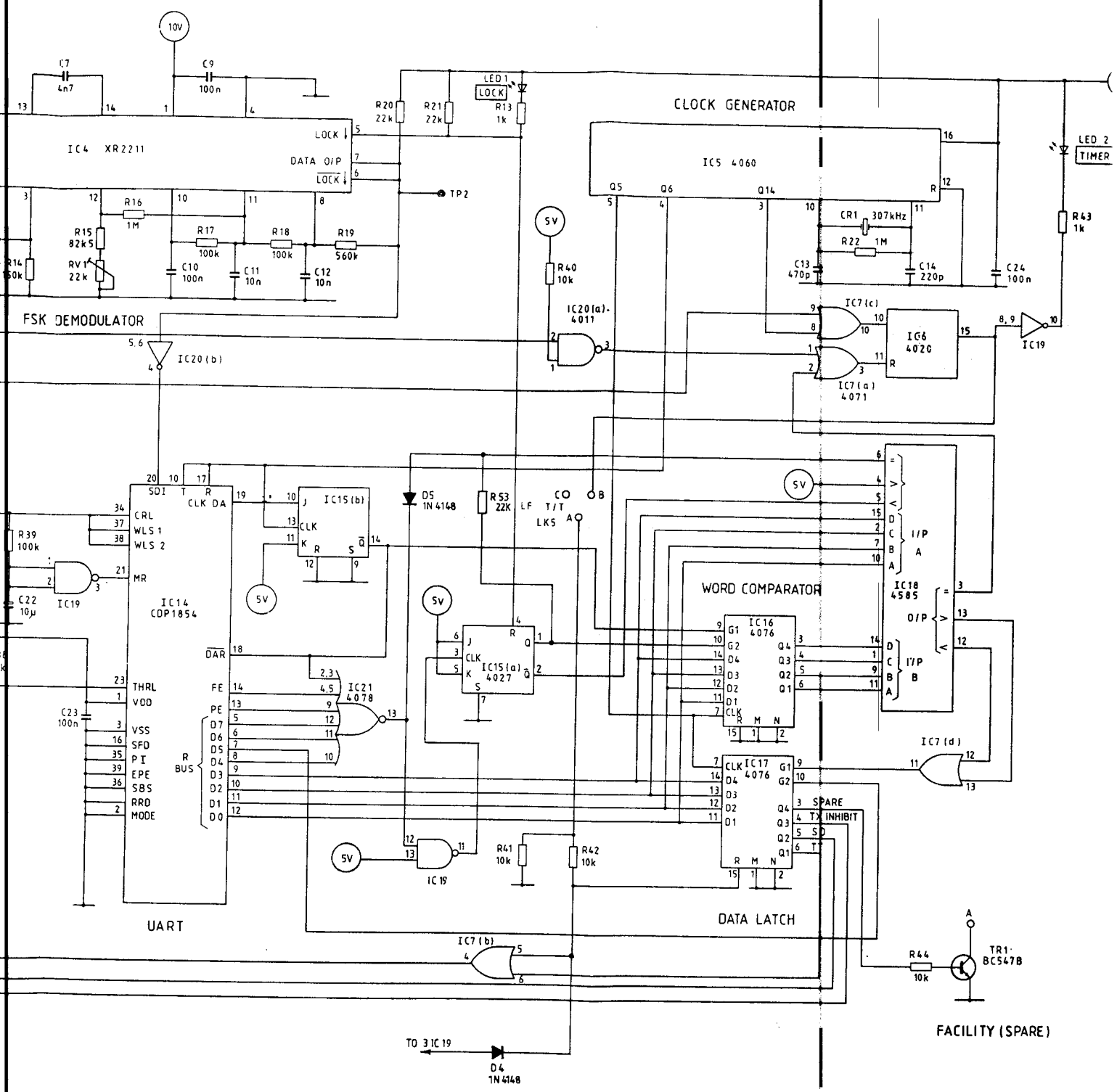

IC SUPPLY PINS			
IC	0V	5V	10V
1, 2, 3	4		8
4	4		1
5, 6	8	16	
7	7	14	
11	12		3
14	3	1	
15, 16, 17, 18	8	16	
19, 20, 21,	7	14	

LINEFAIL TALKTHROUGH LINK LK5 A - B

For Service Manuals Contact
MAURITRON TECHNICAL SERVICES
8 Cherry Tree Rd, Chinnor
Oxon OX9 4QY
Tel:- 01844-351694 Fax:- 01844-352554
Email:- enquiries@mauritron.co.uk

FIG. 6 AT28830/–
CIRCUIT & LAYOUT DIAGRAM